The information contained in this drawing is the sole property of CWS Coil Winding Specialist.
Any reproduction in part or whole without written permission of CWS Coil Winding Specialist is prohibited.

REVISION HISTORY						
REV	ECN	DESCRIPTION	SIGN & DATE			
			BY	DATE	CHK	DATE
B		PRODUCTION RELEASE	TDK	5/08/06	JLAU	5/08/06

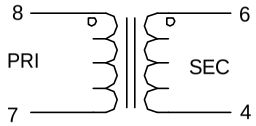

SCHEMATIC

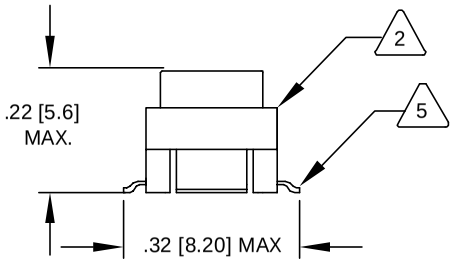

FRONT VIEW

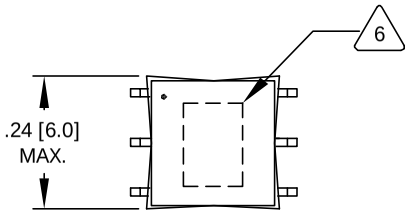

TOP VIEW

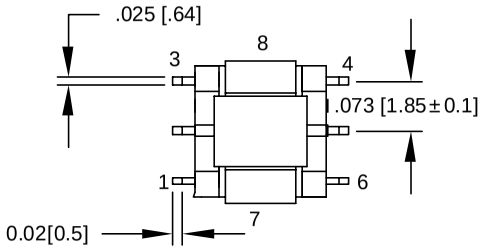

BOTTOM VIEW

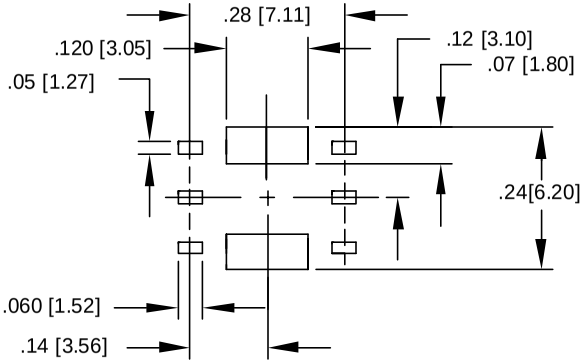

MOUNTING HOLES PATTERN

6 WHERE SHOWN
MARK PART NUMBER AND REVISION

5 REMOVE INSULATION, SOLDERED TO LEADS

4 CONSTRUCTION: ENCAPSULATED USING BOBBIN.

FREQUENCY RANGE AT 100 KHz AND ABOVE
OPERATING TEMP. = - 25 °C TO 125 °C
HI-POT PRIMARY TO SECONDARY = 500 Vrms
PRIMARY CURRENT = 6 A MAX.
SECONDARY DCR = 4.75 OHMS MAX
SECONDARY INDUCTANCE@ 10 KHz, 0.1 V = 980.0 uH MIN
TURNS RATIO PRI:SEC = 1:70

3 SPECIFICATIONS @ 25 °C :

WIRE: UL RECOGNIZED 130 °C RATED MAGNET WIRE
CWS BYTEMARK OR OTHER APPROVED PART
2 CORE: FERRITE TOROID

BOBBIN RATING CLASS B (130 °C) REQUIRED
1 MATERIAL: UL RECOGNIZED 94V-0 FOR FLAMMABILITY

NOTES: UNLESS OTHERWISE SPECIFIED. CURRENT SENSOR.

UNIT: INCHES [MM]

READ FROM BOTTOM UP.

QTY	CODE IDENT	MFG. P/N	DESCRIPTION	ITEM NO.

PARTS LIST

AUTOCAD	X	
SOLIDWORKS		
SIGN		DATE
DRAWN	RPR	5/08/06
CHECKED	JLAU	5/08/06
ENGR.	KSUM	5/08/06
APPR.	JLAU	5/08/06

UNLESS OTHERWISE SPECIFIED
DIMENSIONING AND TOLERANCE PER ANSI Y14.5M
ALL DIMENSIONS ARE IN INCHES AND [MILIMETERS].
TOLERANCE INCHES: .XXX=±.010 .XX=±.020 ∢=±0°30'
TOLERANCE METRICS: .XXX=±.254 .XX=±.51 ∢=±0°30'
ANGLE PROJECTION
DO NOT SCALE DRAWING

COILWS COM, INC
www.coilws.com
CWS Coil Winding Specialist.
353 W. GROVE AVENUE
ORANGE, CA. 92865

TITLE: Current Sense Transformer

SIZE B | DWG. NO. 72-301 | REV B

SCALE 4=1 | SHEET 1 OF 1

CAD-FILE: