The information contained in this drawing is the sole property of CWS Coil Winding Specialist.
Any reproduction in part or whole without written permission of CWS Coil Winding Specialist is prohibited.

REVISION HISTORY

REV	ECN	DESCRIPTION	SIGN & DATE BY	DATE	CHK	DATE
A		PRE-PRODUCTION RELEASE	RPR	7/21/04	JLAU	7/21/04

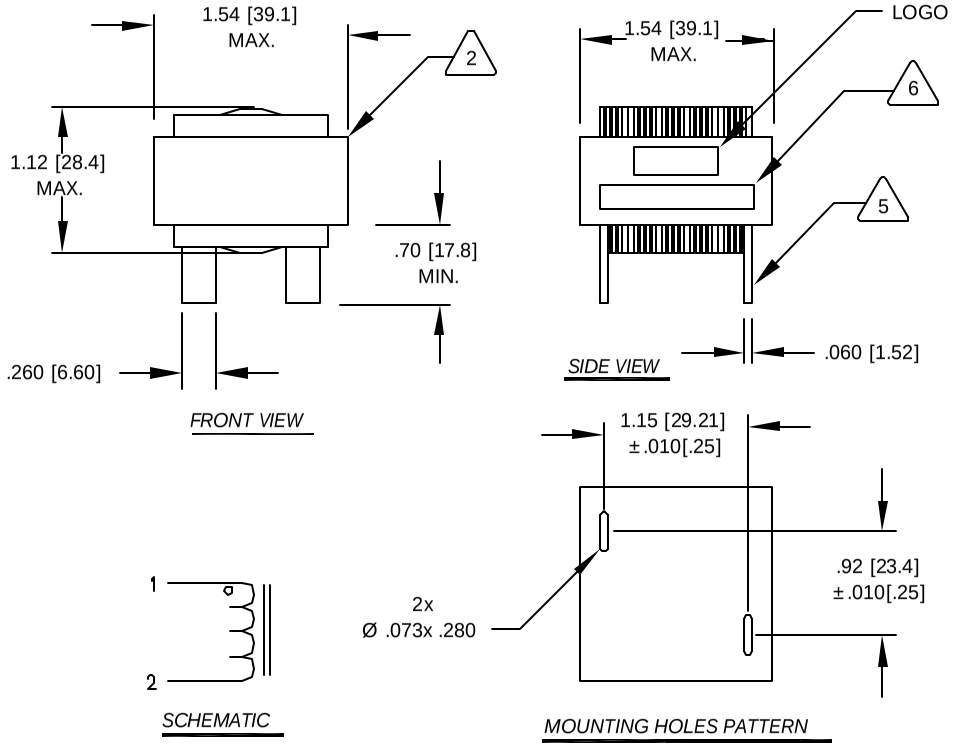

WHERE SHOWN, USING A PERMANENT MARKING METHOD
MARK PART NUMBER AND REVISION APPROX
OVER CORES, (PER NOTE 2)
6 APPLY EPOXY ON MATINGS SURFACES AND WRAP TAPE

FLUSH TO THE COIL EDGE, AS SHOWN
5 REMOVE INSULATION AND TIN LEADS

PRE FORMED FLAT HELICAL COIL, HELIX WOULD EVENLY SPACED
4 CONSTRUCTION:

TO INSURE INTERGRITY OF WINDING INSULATION
HI-POT TEST FOR WINDING TO CORE ISOLATION. 1000VDC
RATED CURRENT: 120 AMPS
DCR = 1.95 mOHM MAX., USING QUADTECH 2200
L = 30.0 uH ± 10%., MEASURED AT 10 KHz, 0.25V, ZERO AC BIAS
3 SPECIFICATIONS: Q = 90 MIN

EPOXY: UNIBOND OR CWS APPROVED PART
OUTER WRAP: 3M GLASS CLOTH OR CWS APPROVED PART
WIRE: UL RECOGNIZED 200°C RATED MAGNET WIRE
2 CORE: MICROMETAL IRON POWER

INSULATION CLASS 200°C REQUIRED
1 MATERIAL: UL RECOGNIZED 94V-0 FOR FLAMMABILITY

NOTES: UNLESS OTHERWISE SPECIFIED.

QTY	CODE IDENT	MFG. P/N	DESCRIPTION	ITEM NO.

PARTS LIST

AUTOCAD		X
SOLIDWORKS		
SIGN		DATE
DRAWN	RPR	7/21/04
CHECKED	JLAU	7/21/04
ENGR.	KSUN	7/21/04
APPR.	JLAU	7/21/04

UNLESS OTHERWISE SPECIFIED
DIMENSIONING AND TOLERANCE PER ANSI Y14.5M
ALL DIMENSIONS ARE IN INCHES AND [MILIMETERS].
TOLERANCE INCHES: .XXX=±.010 .XX=±.020 ∠=±0°30'
TOLERANCE METRICS: .XXX=±.254 .XX=±.51 ∠=±0°30'
ANGLE PROJECTION
DO NOT SCALE DRAWING

COILWS COM, INC
WWW.coilws.com

CWS Coil Winding Specialist.
1510 E. Edinger Ave.
Unit B. Santa Ana, CA. 92705

TITLE: Helical Output Inductors

SIZE B | DWG. NO. E70340-013 | REV A

SCALE 1=1 | SHEET 1 OF 1

EP FORM0005 REV 3 10/01

CAD-FILE: