The information contained in this drawing is the sole property of CWS Coil Winding Specialist.
Any reproduction in part or whole without written permission of CWS Coil Winding Specialist is prohibited.

REVISION HISTORY

REV	ECN	DESCRIPTION	SIGN & DATE BY	DATE	CHK	DATE
A		PRODUCTION RELEASE	RPR	6/08/04	JLAU	6/08/04

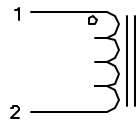

SCHEMATIC

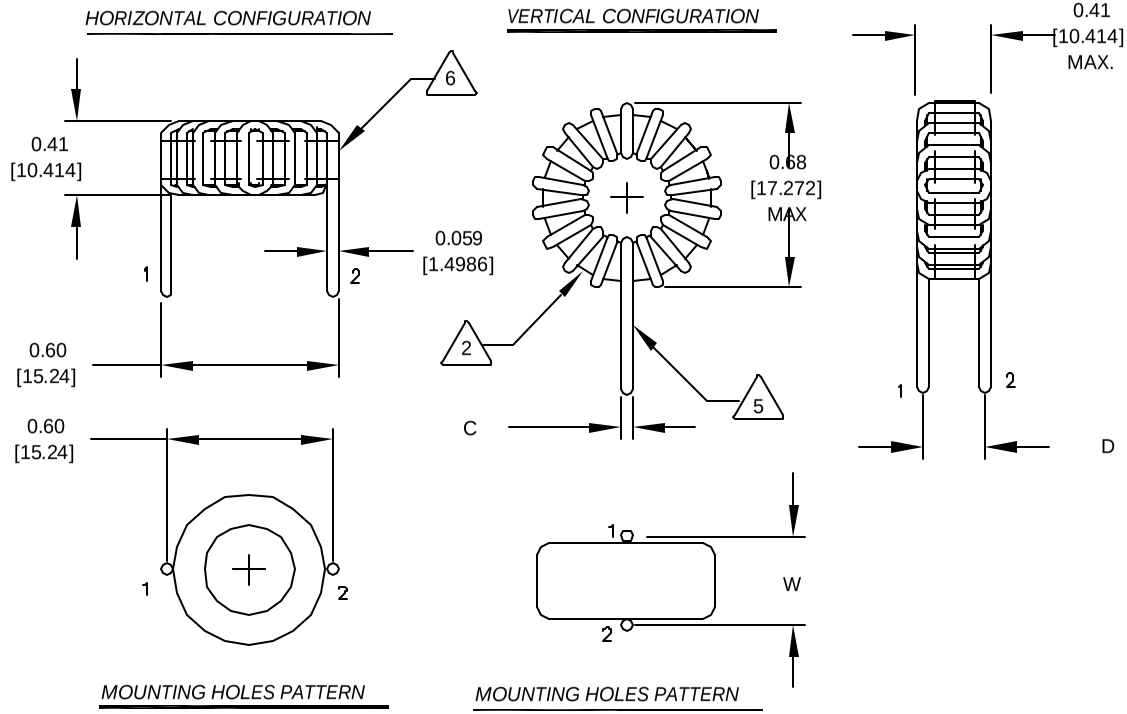

6 WHERE SHOWN, USING A PERMANENT MARKING METHOD IF APPLICABLE, MARK PART NUMBER AND REVISION

5 FLUSH WITH THE COIL EDGE, AS SHOWN
REMOVE INSULATION AND TIN LEADS APPROX. 0.25 INCH

4 WIND WIRE TO CORE EVENLY SPACED
CONSTRUCTION:

HI-POT TEST FOR WIRE TO CORE = 500 VDC
INDUCTANCE @ ± 20% RATED CURRENT = 0.41 uH
DC CURRENT RATING = 24.7 AMPS MAX
DCR = 1.2 MILLI-OHMS, MAX
INDUCTANCE @ 0 AMPS = 0.5 uH, ± 20% , 1 KHz., 0.25 Vrms

3 SPECIFICATIONS @ 25 °C

2 WIRE: UL RECOGNIZED 130°C RATED MAGNET WIRE
CORE: COATED MICROMETAL IRON POWDER

CORE COATING RATING CLASS B (130°) REQUIRED

1 MATERIAL: UL RECOGNIZED 94V-0 FOR FLAMMABILITY

NOTES: UNLESS OTHERWISE SPECIFIED. TOROIDAL INDUCTOR

	CODE IDENT	MFG. P/N	DESCRIPTION	ITEM NO.

PARTS LIST

AUTOCAD	X	
SOLIDWORKS		
SIGN		DATE
DRAWN	RPR	6/08/04
CHECKED	JLAU	6/08/04
ENGR.	KSUN	6/08/04
APPR.	JLAU	6/08/04

UNLESS OTHERWISE SPECIFIED
DIMENSIONING AND TOLERANCE PER ANSI Y14.5M
ALL DIMENSIONS ARE IN INCHES AND [MILIMETERS].
TOLERANCE INCHES: .XXX=±.005 .XX=±.015 ∠=±0°30'
TOLERANCE METRICS: .XXX=±.127 .XX=±.38 ∠=±0°30'
ANGLE PROJECTION
DO NOT SCALE DRAWING

COILWS COM, INC
WWW.coilws.com

CWS Coil Winding Specialist.
1510 E. Edinger Ave.
Unit B. Santa Ana, CA. 92705

TITLE: High Current Toroidal Inductors Vertical & Horizontal

SIZE B | DWG. NO. J20-R5H | REV A

SCALE 2=1 | SHEET 1 OF 1

EP FORM0005 REV 3 10/01

CAD-FILE: