The information contained in this drawing is the sole property of CWS Coil Winding Specialist.
Any reproduction in part or whole without written permission of CWS Coil Winding Specialist is prohibited.

REVISION HISTORY

REV	ECN	DESCRIPTION	SIGN & DATE BY	DATE	CHK	DATE
A		PRODUCTION RELEASE	TDK	7/22/04	TDK	7/22/04

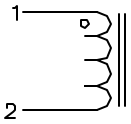

SCHEMATIC

6 USING PERMANENT MARKING METHODS
IF REQUIRED, MARK CWS PART NUMBER

5 LEADS MUST BE CO-PLANAR WITH FLAT SURFACE
REMOVE INSULATION, TIN LEADS SECTION THAT WRAP AROUND BOBBIN

WIND COILS EVENLY SPACED

4 CONSTRUCTION:

HI-POT TEST FOR WINDING TO CORE ISOLATION = 500 VDC MIN
SRF = 13 MHz MIN.
CURRENT RATING = 1.90 AMPS, 40 °C TEMP. RISE, NO AIR FLOW
DCR = 110.0 MILLI-OHMS

DC BIAS OF 2.5 AMPS, INDUCTANCE = 40.0 UH
L= 50 uH ± 10 % @ LOW DC BIAS, 1 KHz; 250 mV

3 SPECIFICATIONS:

2 WIRE: UL RECOGNIZED 155°C RATED MAGNET WIRE
CWS BYTEMARK OR OTHER APPROVED PART
CORE: COATED HIGH FLUX TOROID

RATING CLASS B (130°C MIN.) REQUIRED

1. MATERIAL: UL RECOGNIZED 94V-0 FLAMMABILITY

NOTES: SURFACE MOUNT INDUCTOR

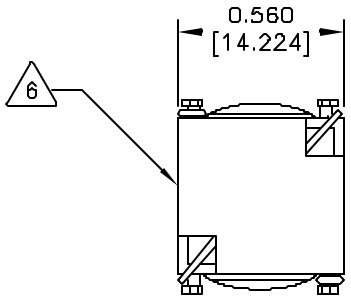

TOP VIEW

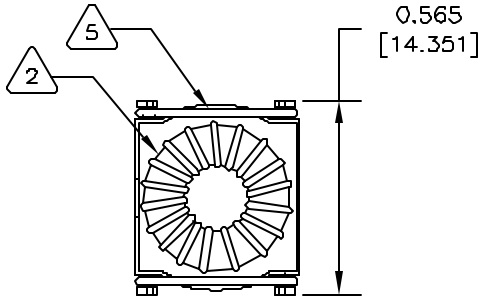

BOTTOM VIEW

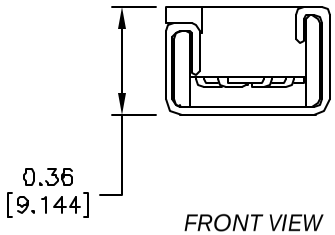

FRONT VIEW

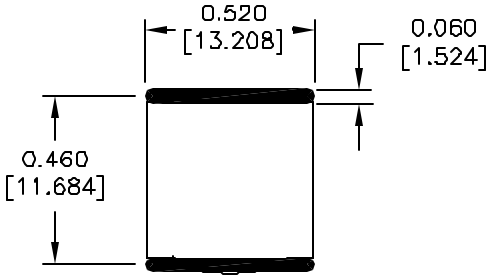

MOUNTING HOLES PATTERN

	CODE IDENT	MFG. P/N	DESCRIPTION	ITEM NO.

PARTS LIST

UNLESS OTHERWISE SPECIFIED
DIMENSIONING AND TOLERANCE PER ANSI Y14.5M
ALL DIMENSIONS ARE IN INCHES AND [MILLIMETERS].
TOLERANCE INCHES: .XXX=±.005 .XX=±.015 ∠=±0°30'
TOLERANCE METRICS: .XXX=±.127 .XX=±.38 ∠=±0°30'
ANGLE PROJECTION
DO NOT SCALE DRAWING

	X
AUTOCAD	
SOLIDWORKS	

	SIGN	DATE
DRAWN	RPR	7/22/04
CHECKED	TDK	7/22/04
ENGR.	JLAU	7/22/04
APPR.	JLAU	7/22/04

COILWS COM, INC
www.coilws.com
CWS Coil Winding Specialist.
1510 E. Edinger Ave.
Unit B, Santa Ana, CA. 92705

TITLE: Surface Mount Power Chokes

SIZE B | DWG. NO. SHF102-500M-1.9A | REV A

SCALE 1=1 | SHEET 1 OF 1

CAD-FILE: