The information contained in this drawing is the sole property of CWS Coil Winding Specialist.
Any reproduction in part or whole without written permission of CWS Coil Winding Specialist is prohibited.

| REVISION HISTORY | | | | | | |
|---|---|---|---|---|---|---|
| REV | ECN | DESCRIPTION | SIGN & DATE | | | |
| | | | BY | DATE | CHK | DATE |
| A | | PRODUCTION RELEASE | RPR | 7/06/04 | JLAU | 7/06/04 |

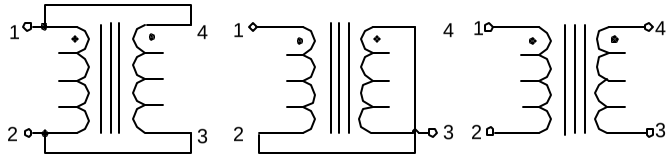


PARALLEL SERIES TRANSFORMER

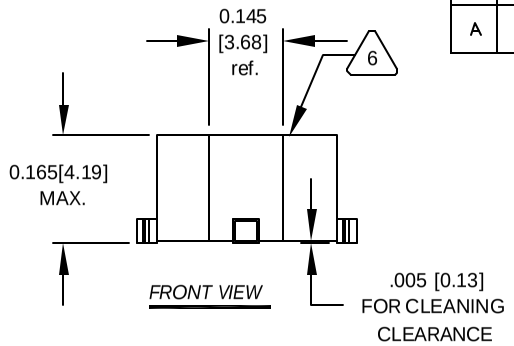


FRONT VIEW

6 AND REVISION WHERE SHOWN
IF APPLICABLE MARK PART NUMBER

5 REMOVE INSULATION AND TIN LEADS

4 WIND ON TO CORE AND EVENLY SPACED
CONSTRUCTION:

TO INSURE INTERGRITY OF WINDING SEPARATION
HI-POT TEST FOR WINDING TO WINDING = 300 VDC MIN.
MAX DCR IS ± 15% OF TYPICAL VALUE.
SERIES DCR = 3.800 OHMS TYP @ 20 °C
SERIES RMS CURRENT = 0.32 AMPS.
PARALLEL: (1,4 - 3,2 ), SERIES: (1 - 3) TIE (2 - 4).
@ 100 KHZ, 0.250 VRMS, 0.0 ADC,
SERIES OPEN CIRCUIT INDUCTANCE = 790.0 uH ± 25 %,

MAX DCR IS ± 15% OF TYPICAL VALUE
PARALLEL DCR = 0.950 OHMS TYP @ 20 °C,
DELTA TEMP 40 °C, AMBIENT TEMP 85 °C.
PARALLEL RMS CURRENT = 0.64 AMPS @
PARALLEL (1,4 - 3,2), SERIES (1 - 3) TIE (2 - 4).
@ 100 KHZ, 0.250 VRMS, 0.0 ADC,
PARALLEL OPEN CIRCUIT INDUCTANCE = 197.5 uH ± 25 %,
PARALLEL RATED INDUCTANCE = 200.0 uH

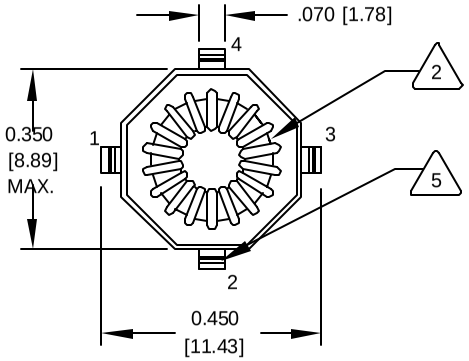


BOTTOM VIEW

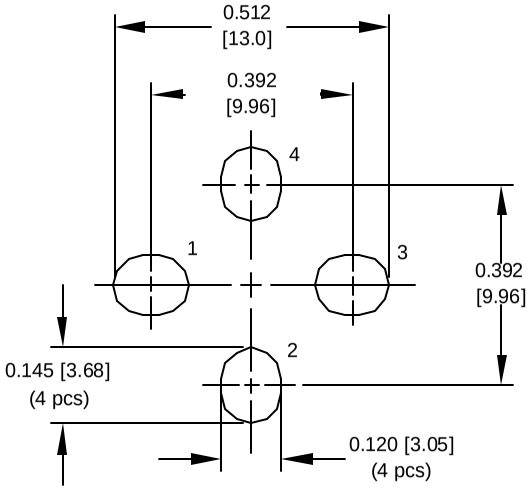


MOUTING HOLES PATTERN

3 SPECIFICATIONS:

WIRE: UL RECOGNIZED 130°C RATING MAGNET WIRE
CWS BYTEMARK OR OTHER APPROVED PART
2 CORE: TOROID

BOBBIN RATING CLASS B (130°C) REQUIRED
1 MATERIAL: UL RECOGNIZED 94V-0 FOR FLAMMABILITY

NOTES: UNLESS OTHERWISE SPECIFIED.

| QTY | CODE IDENT | MFG. P/N | DESCRIPTION | ITEM NO. |
|---|---|---|---|---|

PARTS LIST

| | | |
|---|---|---|
| AUTOCAD | | X |
| SOLIDWORKS | | |
| SIGN | | DATE |
| DRAWN | RPR | 7/06/04 |
| CHECKED | JLAU | 7/06/04 |
| ENGR. | KSUM | 7/06/04 |
| APPR. | JLAU | 7/06/04 |

UNLESS OTHERWISE SPECIFIED
DIMENSIONING AND TOLERANCE PER ANSI Y14.5M
ALL DIMENSIONS ARE IN INCHES AND [MILLIMETERS].
TOLERANCE INCHES: .XXX=±.010 .XX=±.015 ∢=±0°30'
TOLERANCE METRICS: .XXX=±.254 .XX=±.38 ∢=±0°30'
ANGLE PROJECTION
DO NOT SCALE DRAWING

COILWS COM, INC
www.coilws.com
CWS Coil Winding Specialist.
1510 E. Edinger Ave.
Unit B. Santa Ana, CA. 92705

TITLE: Parallel Series Inductor

SIZE B | DWG. NO. CX200-2-HF | REV A

SCALE 4=1 | SHEET 1 OF 1



CAD-FILE: