The information contained in this drawing is the sole property of CWS Coil Winding Specialist.
Any reproduction in part or whole without written permission of CWS Coil Winding Specialist is prohibited.

REVISION HISTORY						
REV	ECN	DESCRIPTION	SIGN & DATE			
			BY	DATE	CHK	DATE
A		PRODUCTION RELEASE	RPR	7/06/04	JLAU	7/06/04

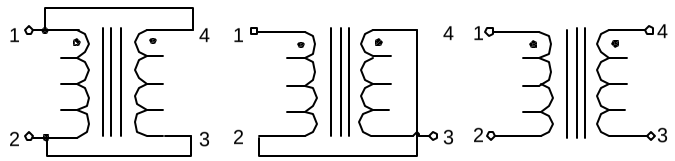

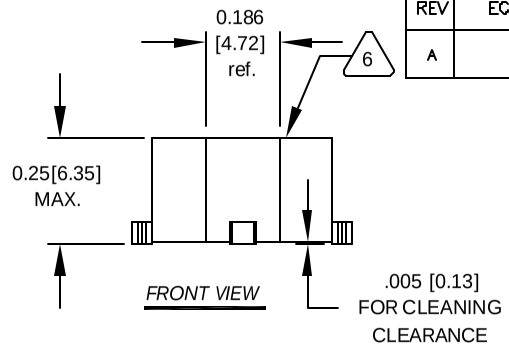

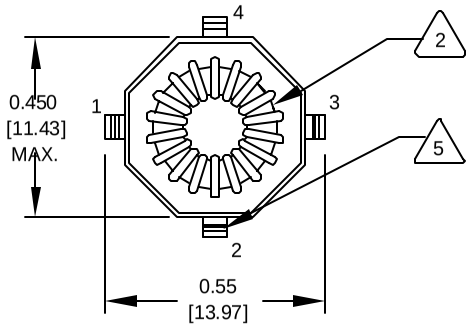

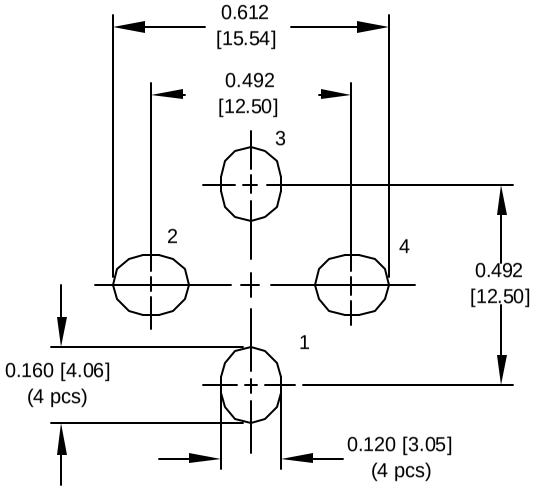

6 AND REVISION WHERE SHOWN
IF APPLICABLE MARK PART NUMBER

5 REMOVE INSULATION AND TIN LEADS

WIND ON TO CORE AND EVENLY SPACED

4 CONSTRUCTION:

TO INSURE INTERGRITY OF WINDING SEPARATION
HI-POT TEST FOR WINDING TO WINDING = 300 VDC MIN.
SERIES DCR= 2.180 OHMS MAX.
SERIES FULL LOAD CURRENT = 0.32 AMPS. DC.
SERIES FULL LOAD INDUCTANCE = 444.32 uH MIN.
SERIES OPEN CIRCUIT INDUCTANCE = 802.82 uH @ ± 20 %
PARALLEL DCR= 0.545 OHMS MAX.
PARALLEL FULL LOAD CURRENT = 0.64 AMPS. DC.
PARALLEL FULL LOAD INDUCTANCE = 111.08 uH MIN.
PARALLEL OPEN CIRCUIT INDUCTANCE = 200.70 uH @ ± 20 %

3 SPECIFICATIONS:

WIRE: UL RECOGNIZED 130°C RATING MAGNET WIRE
2 CWS BYTEMARK OR OTHER APPROVED PART
CORE: TOROID

BOBBIN RATING CLASS B (130°C) REQUIRED
1 MATERIAL: UL RECOGNIZED 94V-0 FOR FLAMMABILITY

NOTES: UNLESS OTHERWISE SPECIFIED.

QTY	CODE IDENT	MFG. P/N	DESCRIPTION	ITEM NO.

PARTS LIST

AUTOCAD		X
SOLIDWORKS		
SIGN		DATE
DRAWN	RPR	7/06/04
CHECKED	JLAU	7/06/04
ENGR.	KSUN	7/06/04
APPR.	JLAU	7/06/04

UNLESS OTHERWISE SPECIFIED
DIMENSIONING AND TOLERANCE PER ANSI Y14.5M
ALL DIMENSIONS ARE IN INCHES AND [MILIMETERS].
TOLERANCE INCHES: .XXX=±.010 .XX=±.015 ∠=±0°30'
TOLERANCE METRICS: .XXX=±.254 .XX=±.38 ∠=±0°30'
ANGLE PROJECTION
DO NOT SCALE DRAWING

COILWS COM, INC
WWW.coilws.com

CWS Coil Winding Specialist.
1510 E. Edinger Ave.
Unit B. Santa Ana, CA. 92705

TITLE: Parallel Series Inductor

SIZE B | DWG. NO. CX200-4-SD | REV A

SCALE 4=1 | SHEET 1 OF 1

EP FORM0005 REV 3 10/01

CAD-FILE: