The information contained in this drawing is the sole property of CWS Coil Winding Specialist.
Any reproduction in part or whole without written permission of CWS Coil Winding Specialist is prohibited.

REVISION HISTORY						
REV	ECN	DESCRIPTION	SIGN & DATE			
			BY	DATE	CHK	DATE
A		PRODUCTION RELEASE	RPR	6/02/04	JLAU	6/04/03

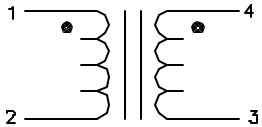

SCHEMATIC

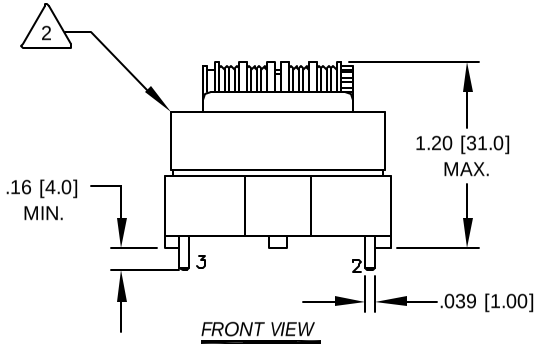

FRONT VIEW

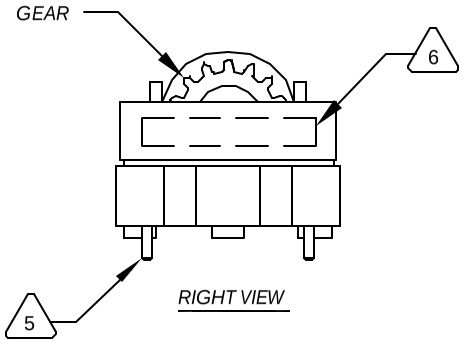

RIGHT VIEW

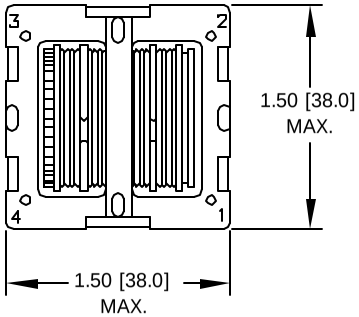

BOTTOM VIEW

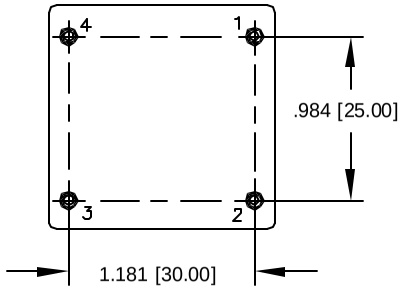

FOOT PRINT

6 WHERE SHOWN, USING A PERMANENT MARKING METHOD MARK PART NUMBER AND REVISION APPROX

5 REMOVE INSULATION AND SOLDER TO BOBBIN LEADS

4 WIND BOTH COILS EVENLY SPACED ON BOBBIN
CONSTRUCTION:

INSURE INTERGRITY OF WINDING SEPARATION
HI-POT TEST FOR INTERWINDING ISOLATION, 1250VDC TO
WIRE SIZE DIAMETER = 0.85 MILLIMETER
NUMBER OF TURNS = 38
DCR = 0.085 MILLI-OHMS MAX
CURRENT RATING = 4.5A AC
L = 6.80 mH @ 10 KHz, 0.250 Vrms;

3 SPECIFICATIONS:

WIRE: UL RECOGNIZED 130° RATED MAGNET WIRE
CWS BYTEMARK OR OTHER APPROVED PART
2 CORE: SINGLE PIECE FERRITE H CORE

BOBBIN RATING CLASS B (130°) REQUIRED
1 MATERIAL: UL RECOGNIZED 94V-0 FOR FLAMMABILITY

NOTES: UNLESS OTHERWISE SPECIFIED.

QTY	UM	CODE IDENT	MFG. P/N	DESCRIPTION	ITEM NO.

PARTS LIST

AUTOCAD		X
SOLIDWORKS		
SIGN		DATE
DRAWN	RPR	6/02/04
CHECKED	JLAU	6/02/03
ENGR.	KSUN	6/02/03
APPR.	JLAU	6/02/03

UNLESS OTHERWISE SPECIFIED
DIMENSIONING AND TOLERANCE PER ANSI Y14.5M
ALL DIMENSIONS ARE IN INCHES AND [MILLIMETERS].
TOLERANCE INCHES: .XXX=±.010 .XX=±.015 ∠=±0°30'
TOLERANCE METRICS: .XXX=±.254 .XX=±.38 ∠=±0°30'
ANGLE PROJECTION
DO NOT SCALE DRAWING

COILWS COM, INC
www.coilws.com

CWS Coil Winding Specialist.
1510 E. Edinger Ave.
Unit B, Santa Ana, CA. 92705

TITLE: Common Mode Line Filter Horizontal Mount Chokes

SIZE B | DWG. NO. 35H_6K8 | REV A

SCALE 1=1 | SHEET 1 OF 1

EP FORM0005 REV 3 10/01

CAD-FILE: 01-100101-00_A