The information contained in this drawing is the sole property of CWS Coil Winding Specialist.
Any reproduction in part or whole without written permission of CWS Coil Winding Specialist is prohibited.

REVISION HISTORY						
REV	ECN	DESCRIPTION	SIGN & DATE			
			BY	DATE	CHK	DATE
A		INITIAL PRODUCTION RELEASE	KLC	08/06/10	AK	08/06/10

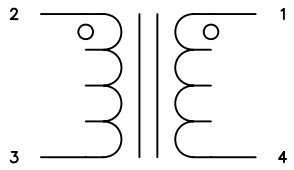

SCHEMATIC

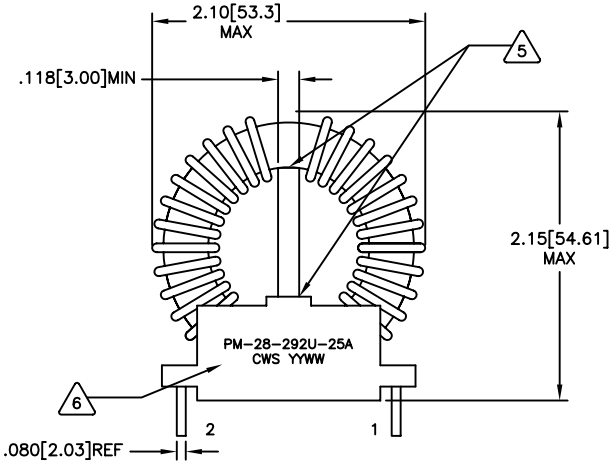

FRONT VIEW

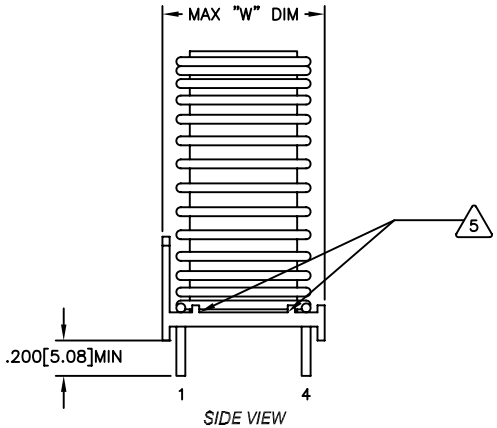

SIDE VIEW

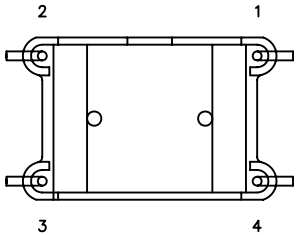

BOTTOM VIEW

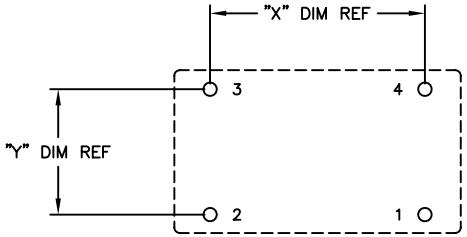

MOUNTING HOLES PATTERN

7 BUILT TO RoHS COMPLIANCE AND LEAD FREE.

6 IF APPLICABLE, MARK PART NUMER AND REVISION

5 ADD EPOXY WHERE SHOWN
INSERT TINNED LEAD THRU BASE AS SELF-LEAD
REMOVE WIRE INSULATION AND TIN

4 WIND COILS EVENLY SPACED
CONSTRUCTION:

WEIGHT: ~ 95.0 GRAMS
OPERATING RANGE: -40° TO +125°C
HI-POT WINDING-TO-WINDING 1250 V AC, 10 SEC
INTERWINDING CAPACITANCE 50 pF TYPICAL
LEAKAGE INDUCTANCE 25.5 uH TYPICAL
RATED CURRENT MAX. = 25 AMPS RMS
DCR=5.8 MILLI-OHMS MAX PER WINDING
INDUCTANCE = 1.8 mH MIN

3 SPECIFICATIONS @ 25°C, 10 KHz, .250 mV

WIRE: UL RECOGNIZED CL180°C RATED MAGNET WIRE
FR4 SPACER: 3.00 MM MINIMUM THICKNESS
HEADER: UL CERTIFIED TOROID BASE

2 CORE: HIGH PERM MANGANESE ZINC

RATING UL-CLASS B (130°) REQUIRED

1 MATERIAL: UL RECOGNIZED 94V-0 FLAMMABILITY FOR BOBBIN

NOTES: UNLESS OTHERWISE SPECIFIED. READ FROM BOTTOM UP.

PM-SERIES	"X" DIM	"Y" DIM	MAX W DIM	CHECKED
PM-12	.80 [20.32]	.40 [10.16]	.625 [15.88]	
PM-16	.90 [22.86]	.60 [15.24]	.825 [20.96]	
PM-25	1.20 [30.48]	.70 [17.78]	.930 [23.62]	
PM-28	1.50 [38.1]	.90 [22.86]	1.130 [28.70]	X

UNLESS OTHERWISE SPECIFIED
DIMENSIONING AND TOLERANCE PER ANSI Y14.5M
ALL DIMENSIONS ARE IN INCHES AND [MILIMETERS].
TOLERANCE INCHES: .XXX=±.005 .XX=±.015 ∢=±0°30'
TOLERANCE METRICS: .XXX=±.127 .XX=±.38 ∢=±0°30'
ANGLE PROJECTION
DO NOT SCALE DRAWING

	CODE IDENT	MFG. P/N	DESCRIPTION	ITEM NO.
PARTS LIST				

AUTOCAD	X	
SOLIDWORKS		
SIGN		DATE
DRAWN	KLC	08/06/10
CHECKED	AK	08/06/10
ENGR.	KLC	08/06/10
APPR.	KLC	08/06/10

COILWS.COM, INC
www.coilws.com

CWS Coil Winding Specialist.
353 W Grove Ave
Orange, CA 92865

TITLE: Common Mode Line Filter
2.4mH , 25 Amp

SIZE B | DWG. NO. PM-28-292U-25A | REV A

SCALE 2=1 | SHEET 1 OF 1

CAD-FILE: