The information contained in this drawing is the sole property of CWS Coil Winding Specialist.
Any reproduction in part or whole without written permission of CWS Coil Winding Specialist is prohibited.

| REVISION HISTORY | | | | | | |
|---|---|---|---|---|---|---|
| REV | ECN | DESCRIPTION | SIGN & DATE | | | |
| | | | BY | DATE | CHK | DATE |
| A | | PRODUCTION RELEASE | TDK | 2/28/05 | JLAU | 2/28/05 |

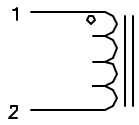


SCHEMATIC

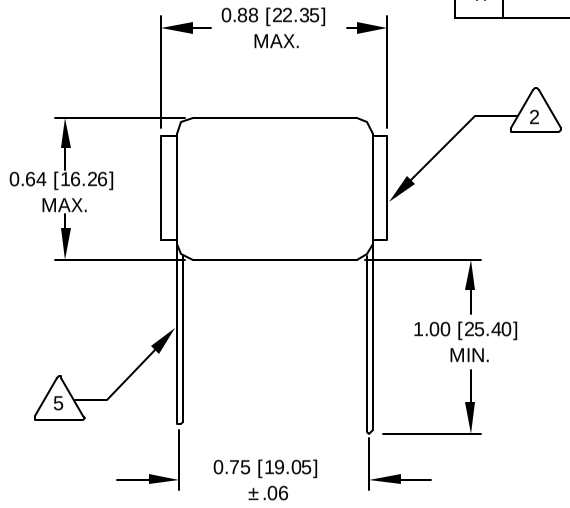


FRONT VIEW

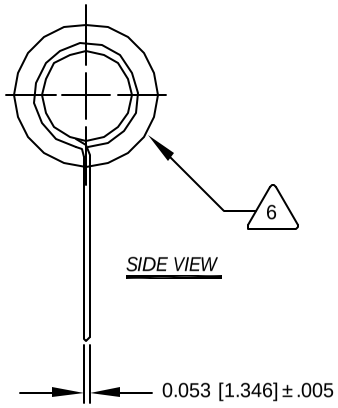


SIDE VIEW

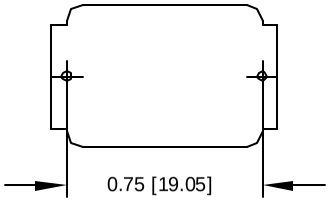


MOUTING HOLES PATTERN

6 WHERE SHOWN, USING A PERMANENT MARKING METHOD MARK PART NUMBER AND REVISION IN APPROX

5 FLUSH WITH THE COIL EDGE, AS SHOWN
REMOVE INSULATION AND TIN LEADS

FIX LEADS SPACING PER DRAWING
USE VW-1 RATED SHRINK TUBING TO COVER WINDING
WIND RATED WIRE TO ROD CORE AND EVENLY SPACED

4 CONSTRUCTION:

HI-POT CORE TO WIRE = 750 VDC

MAX TEMP RISE AT RATED CURRENT = 35 °C

DCR = 9.0 MILLI-OHMS MAX
MAX L DROP AT RATED CURRENT = 5%
RATED CURRENT (DC) = 14 AMPS.
L = 5.0 uH ±10%@1KHz, 0.25 mV, 0 ADC

3 SPECIFICATIONS @ 25°C

WIRE: UL RECOGNIZED 130°C RATED MAGNET WIRE
CWS BYTEMARK OR OTHER APPROVED PART

2 CORE: FERRITE ROD

1 MATERIAL: UL RECOGNIZED 94V-0 FOR FLAMMABILITY

NOTES: UNLESS OTHERWISE SPECIFIED. READ FROM BOTTOM UP.

| CODE IDENT | MFG. P/N | DESCRIPTION | ITEM NO. |
|---|---|---|---|

PARTS LIST

| | | |
|---|---|---|
| AUTOCAD | X | |
| SOLIDWORKS | | |
| SIGN | | DATE |
| DRAWN | TDK | 2/28/05 |
| CHECKED | JLAU | 2/28/05 |
| ENGR. | KSUM | 2/28/05 |
| APPR. | JLAU | 2/28/05 |

UNLESS OTHERWISE SPECIFIED
DIMENSIONING AND TOLERANCE PER ANSI Y14.5M
ALL DIMENSIONS ARE IN INCHES AND [MILIMETERS].
TOLERANCE INCHES: .XXX=±.005 .XX=±.015 ∢=±0°30'
TOLERANCE METRICS: .XXX=±.127 .XX=±.38 ∢=±0°30'
ANGLE PROJECTION
DO NOT SCALE DRAWING

COILWS COM, INC
WWW.coilws.com
CWS Coil Winding Specialist.
1510 E. Edinger Ave.
Unit B, Santa Ana, CA. 92705

TITLE: High Current RF Chokes

SIZE B | DWG. NO. J-5508 | REV A

SCALE 2=1 | SHEET 1 OF 1



CAD-FILE: