The information contained in this drawing is the sole property of CWS Coil Winding Specialist.
Any reproduction in part or whole without written permission of CWS Coil Winding Specialist is prohibited.

REVISION HISTORY						
REV	ECN	DESCRIPTION	SIGN & DATE			
			BY	DATE	CHK	DATE
A		PRE-PRODUCTION RELEASE	TDK	4/10/04	JLAU	4/12/04

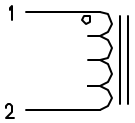

SCHEMATIC

VERTICAL CONFIGURATION

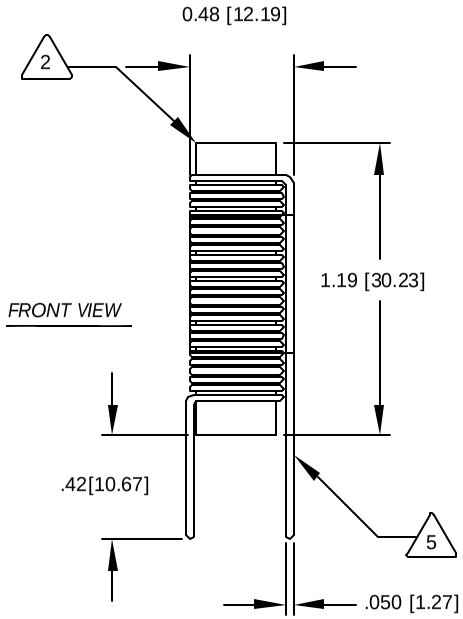

FRONT VIEW

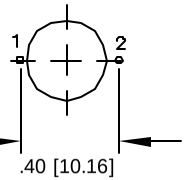

MOUNTING HOLES PATTERN

HORIZONTAL CONFIGURATION

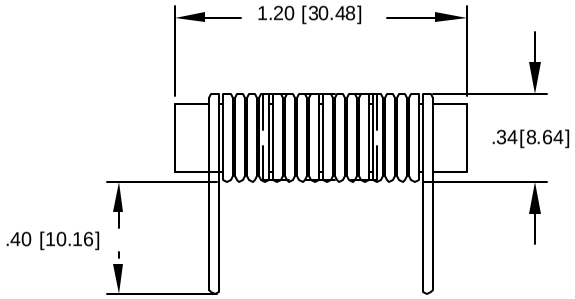

FRONT VIEW

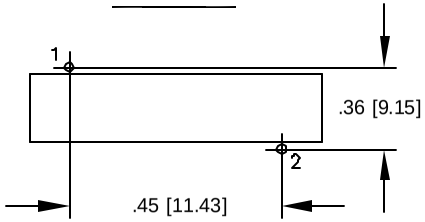

MOUNTING HOLES PATTERN

5 LEADS MUST BE TANGENT TO THE CORE
FLUSH WITH THE CORE EDGE, AS SHOWN
REMOVE INSULATION AND TIN LEADS

4 WIND COILS EVENLY SPACED
CONSTRUCTION:

HI-POT TEST FOR CORE TO WINIDNG = 500 VDC
DCR= 2.9 MILLI-OHMS @ 25 °C
L= 2.2 UH ± 20% , 1 KHz, 0.25 Vrms, 0 ADC;

3 SPECIFICATIONS: MAX DC CURRENT= 13 AMPS

WIRE: UL RECOGNIZED 130° RATED MAGNET WIRE
CWS BYTEMARK OR OTHER APPROVED PART
2 CORE: MANGANESE ZINC FERRITE ROD

RATING CLASS B (130°) REQUIRED
1 MATERIAL: WIRE INSULATION - UL RECOGNIZED 94V-0 FOR FLAMMABILITY

NOTES: UNLESS OTHERWISE SPECIFIED. POWER INDUCTOR.
DIMENSIONS IN INCHES [MM]

	CODE IDENT	MFG. P/N	DESCRIPTION	ITEM NO.

PARTS LIST

AUTOCAD		X
SOLIDWORKS		
SIGN		DATE
DRAWN	TDK	4/10/04
CHECKED	JLAU	4/10/04
ENGR.	KSUN	4/10/04
APPR.	JLAU	4/12/04

UNLESS OTHERWISE SPECIFIED
DIMENSIONING AND TOLERANCE PER ANSI Y14.5M
ALL DIMENSIONS ARE IN INCHES AND [MILIMETERS].
TOLERANCE INCHES: .XXX=±.005 .XX=±.015 ∠=±0°30'
TOLERANCE METRICS: .XXX=±.127 .XX=±.38 ∠=±0°30'
ANGLE PROJECTION
DO NOT SCALE DRAWING

COILWS COM, INC
www.coilws.com
CWS Coil Winding Specialist.
1510 E. Edinger Ave.
Unit B. Santa Ana, CA. 92705

TITLE: Power Chokes

SIZE B | DWG. NO. PCR0630-2R2M | REV A

SCALE 2=1 | SHEET 1 OF 1

CAD-FILE: