The information contained in this drawing is the sole property of CWS Coil Winding Specialist.
Any reproduction in part or whole without written permission of CWS Coil Winding Specialist is prohibited.

REVISION HISTORY						
REV	ECN	DESCRIPTION	SIGN & DATE			
			BY	DATE	CHK	DATE
B		PRODUCTION RELEASE	RPR	6/28/06	JLAU	6/28/06

7 BUILT TO RoHS COMPLIANCE AND LEAD FREE.

6 WHERE SHOWN, USING A PERMANENT MARKING METHOD
MARK PART NUMBER AND REVISION IN APPROX

5 FLUSH WITH THE COIL EDGE, AS SHOWN
REMOVE INSULATION AND TIN LEADS APPROX. 0.5 INCH

WIND ON EACH SIDE TO CORE AND EVENLY SPACED

4 CONSTRUCTION:

TEMP RANGE = -25 °C TO 120°C
MAX TEMP RISE = 40 °C
TEST VOLTAGE = 2000 VAC, 1 MIN.
TOTAL DCR OF BOTH WINDINGS = 52.9 MILLI-OHMS COMBINED.
RATED VOLTAGE = 250 VAC OR VDC
RATED CURRENT = 5 AMPS
L = 1.0 mH MIN., 50 Hz - 400 KHz, 0.250 Vrms, 0 ADC
INSULATION RESISTANCE = 100 MEGA-OHMS MIN. @ 500 VDC

3 SPECIFICATIONS AT 25°C:

APPROVED PART
WIRE: UL RECOGNIZED 200°C RATED MAGNET WIRE
CWS BYTEMARK OR OTHER APPROVED PART
2 CORE: FERRITE TOROID, HIGH PERM MNZN

BOBBIN RATING CLASS B (200°) REQUIRED
1 MATERIAL: UL RECOGNIZED 94V-0 FOR FLAMMABILITY

NOTES: UNLESS OTHERWISE SPECIFIED.
READ FROM BOTTOM UP.

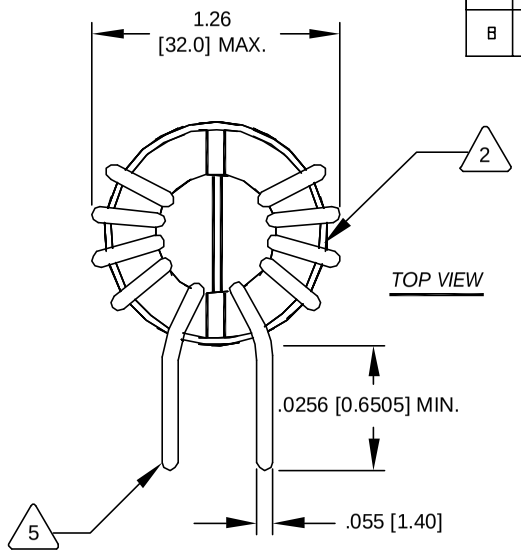

TOP VIEW

BOTTOM VIEW

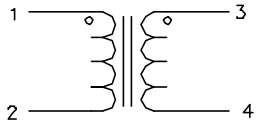

SCHEMATIC

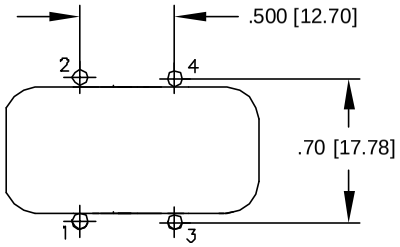

MOUNTING HOLES PATTERN

QTY	CODE IDENT	MFG. P/N	DESCRIPTION	ITEM NO.

PARTS LIST

AUTOCAD	X	
SOLIDWORKS		
SIGN		DATE
DRAWN	RPR	6/28/06
CHECKED	JLAU	6/28/06
ENGR.	KSUM	6/28/06
APPR.	JLAU	6/28/06

UNLESS OTHERWISE SPECIFIED
DIMENSIONING AND TOLERANCE PER ANSI Y14.5M
ALL DIMENSIONS ARE IN INCHES AND [MILIMETERS].
TOLERANCE INCHES: .XXX=±.005 .XX=±.015 ∢=±0°30'
TOLERANCE METRICS: .XXX=±.127 .XX=±.38 ∢=±0°30'
ANGLE PROJECTION
DO NOT SCALE DRAWING

COILWS COM, INC
www.coilws.com

CWS Coil Winding Specialist.
353 W. GROVE AVENUE
ORANGE , CA. 92865

TITLE:
Common Mode Chokes
Vertical Mount

SIZE B | DWG. NO. HL-V-102U-5A | REV B

SCALE 2=1 | SHEET 1 OF 1

EP FORM0005 REV 3 10/01

CAD-FILE: