The information contained in this drawing is the sole property of CWS Coil Winding Specialist.
Any reproduction in part or whole without written permission of CWS Coil Winding Specialist is prohibited.

REVISION HISTORY						
REV	ECN	DESCRIPTION	SIGN & DATE			
			BY	DATE	CHK	DATE
A		PRODUCTION RELEASE	RLU	2/11/05	JLAU	2/11/05

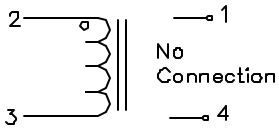

SCHEMATIC

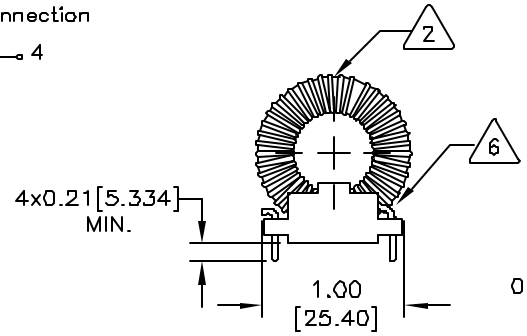

FRONT VIEW

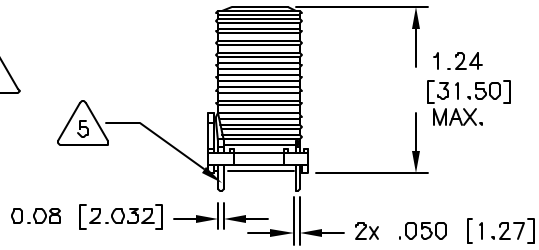

SIDE VIEW

WHERE SHOWN
IF APPLICABLE, MARK PART NUMER AND REVISION
6 APPLY EPOXY TO SECURE COIL TO BOBBIN.

INSERT THROUGH BOBBIN AS OUTPUT LEADS
5 REMOVE WIRE INSULATION AND

WIND COILS EVENLY SPACED
4 CONSTRUCTION:

INDUCTANCE AT RATED CURRENT = 71.0uH
MAX. TEMP RISE AT RATED CURRENT = 9°C
RATED CURRENT MAX. = 2.4 AMPS DC
DCR= 34.1 MILLI-OHMS MAX
INDUCTANCE @ 0 ADC = 84.0uH±10%; 15.7KHz; 0.250 Vrms
3 SPECIFICATIONS @ 25°C:

WIRE: UL RECOGNIZED 155°C OR 200°C RATED MAGNET WIRE
CWSBYTEMARK OR OTHER APPROVED PART
2 CORE: COATED IRON POWDER TOROID

RATING CLASS B (130°) REQUIRED
1. MATERIAL: UL RECOGNIZED 94V-0 FLAMMABILITY FOR BOBBIN

NOTES: UNLESS OTHERWISE SPECIFIED. READ FROM BOTTOM UP.

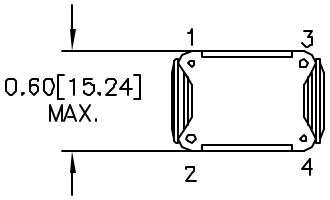

BOTTOM VIEW

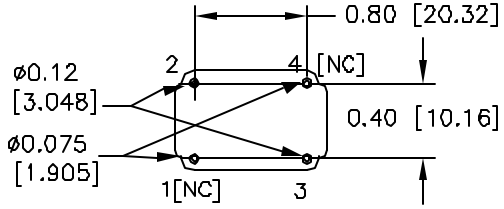

MOUNTING HOLES PATTERN

	CODE IDENT	MFG. P/N	DESCRIPTION	ITEM NO.

PARTS LIST

UNLESS OTHERWISE SPECIFIED
DIMENSIONING AND TOLERANCE PER ANSI Y14.5M
ALL DIMENSIONS ARE IN INCHES AND [MILIMETERS].
TOLERANCE INCHES: .XXX=±.005 .XX=±.015 ∢=±0°30'
TOLERANCE METRICS: .XXX=±.127 .XX=±.38 ∢=±0°30'
ANGLE PROJECTION
DO NOT SCALE DRAWING

AUTOCAD		X
SOLIDWORKS		
SIGN		DATE
DRAWN	RLU	2/11/05
CHECKED	JLAU	2/11/05
ENGR.	JLAU	2/11/05
APPR.	KKSUM	2/11/05

COILWS COM, INC
www.coilws.com

CWS Coil Winding Specialist.
1510 E. Edinger Ave.
Unit B, Santa Ana, CA. 92705

TITLE: Output Choke
2.4 Amps

SIZE B | DWG. NO. OPC-1-84-2.4 | REV A

SCALE 1=1 | SHEET 1 OF 1

EP FORM0005 REV 3 10/01

CAD-FILE: