The information contained in this drawing is the sole property of CWS Coil Winding Specialist.
Any reproduction in part or whole without written permission of CWS Coil Winding Specialist is prohibited.

REVISION HISTORY						
REV	ECN	DESCRIPTION	SIGN & DATE			
			BY	DATE	CHK	DATE
A		PRODUCTION RELEASE	RLU	4/18/07	JLAU	4/18/07

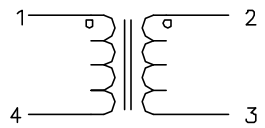

SCHEMATIC

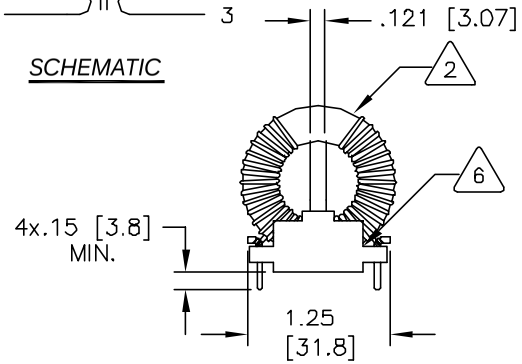

FRONT VIEW

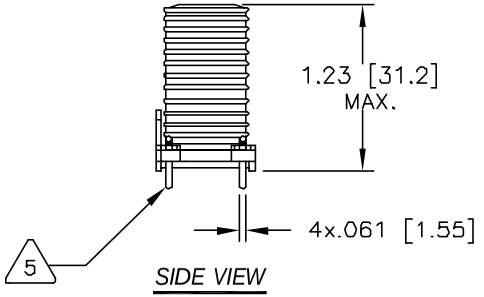

SIDE VIEW

7 BUILT TO RoHS COMPLIANCE AND LEAD FREE

WHERE SHOWN
IF APPLICABLE, MARK PART NUMBER AND REVISION

△6 APPLY EPOXY 2 PARTS

△5 REMOVE INSULATION AND USE AS BOBBIN LEADS

WIND BOTH COILS EVENLY SPACED

4 CONSTRUCTION:

MAX LEAKAGE INDUCTANCE = 21.0uH
TYPICAL SRF = 2MHz
HI-POT TEST FOR INTERWINDING ISOLATION = 1250VDC
MAX. TEMP RISE AT RATED CURRENT = 35°C
RATED CURRENT = 13.0 AMPS AC MAX
DCR= 2.90 MILLI-OHMS MAX. PER SIDE
L= .280 mH MIN. +25% (100KHz, <1Vrms)

3 SPECIFICATIONS @ 25°C

WIRE: UL RECOGNIZED 155°C OR 200°C RATED MAGNET WIRE
CWS BYTEMARK OR OTHER APPROVED PART

△2 CORE: COATED FERRITE TOROID, HIGH PERM MNZN

RATING CLASS B (130°C) REQUIRED

1. MATERIAL: UL RECOGNIZED 94V-0 FLAMMABILITY FOR BOBBIN

NOTES: UNLESS OTHERWISE SPECIFIED. READ FROM BOTTOM UP.

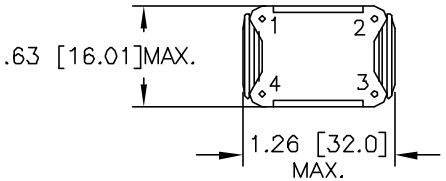

BOTTOM VIEW

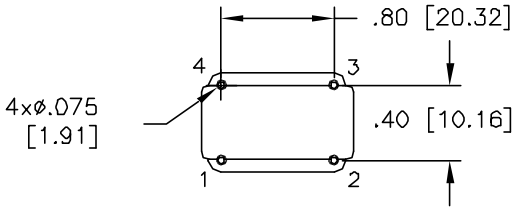

MOUNTING HOLES PATTERN

CODE IDENT	MFG. P/N	DESCRIPTION	ITEM NO.

PARTS LIST

UNLESS OTHERWISE SPECIFIED			
DIMENSIONING AND TOLERANCE PER ANSI Y14.5M	AUTOCAD	X	
ALL DIMENSIONS ARE IN INCHES AND [MILIMETERS].	SOLIDWORKS		
TOLERANCE INCHES: .XXX=±.005 .XX=±.015 ∠=±0°30'	SIGN	DATE	
TOLERANCE METRICS: .XXX=±.127 .XX=±.38 ∠=±0°30'	DRAWN RLU	4/18/07	
ANGLE PROJECTION	CHECKED JLAU	4/18/07	
DO NOT SCALE DRAWING	ENGR. KSUM	4/18/07	
	APPR. JLAU	4/18/07	

COILWS COM, INC
www.coilws.com
CWS Coil Winding Specialist.
353 W GROVE AVENUE
ORANGE, CA. 92865

TITLE: Common Mode Line Chokes

SIZE	DWG. NO.	REV
B	PM-S-281U-13A	A

SCALE 1=1 SHEET 1 OF 1

CAD-FILE: