The information contained in this drawing is the sole property of CWS Coil Winding Specialist.
Any reproduction in part or whole without written permission of CWS Coil Winding Specialist is prohibited.

REVISION HISTORY						
REV	ECN	DESCRIPTION	SIGN & DATE			
			BY	DATE	CHK	DATE
A		PRODUCTION RELEASE	TDK	5/19/04	JLAU	5/19/04

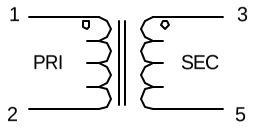

SCHEMATIC

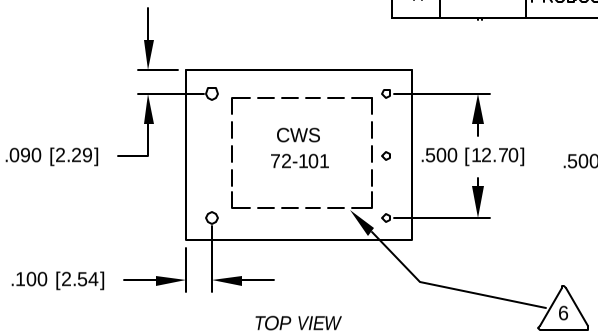

TOP VIEW

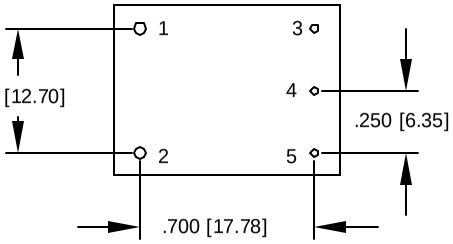

MOUNTING HOLES PATTERN

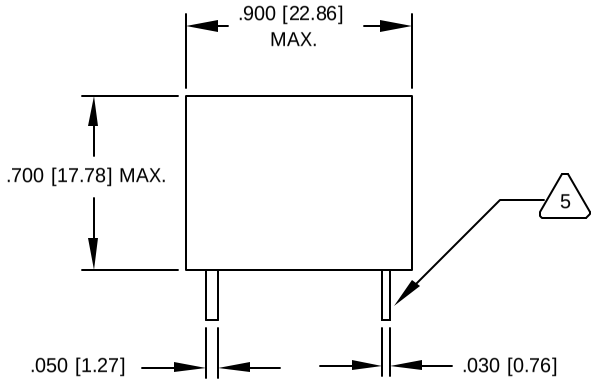

FROM VIEW

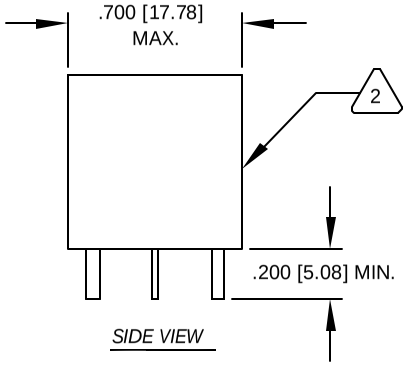

SIDE VIEW

6 WHERE SHOWN
MARK PART NUMBER AND REVISION

5 REMOVE INSULATION, SOLDERED TO LEADS

4 CONSTRUCTION: ENCAPSULATED USING BOBBIN.

FREQ. RANGE = 20 KHz TO 200 KHz
OPERATING TEMP. = - 25 °C TO 125 °C
HI-POT PRIMARY TO SECONDARY = 3750 Vrms
ONE TURN PRIMARY PEAK SENSE CURRENT = 20 A
PRIMARY BIPOLAR = 300 AMPS-uSEC RATING MAX
PRIMARY UNIPOLAR = 150 AMPS-uSEC RATING MAX

SECONDARY RATED TERMINATING RESISTANCE = 50 OHMS NOMINAL
SECONDARY DCR = 0.7 OHMS MAX
SECONDARY INDUCTANCE TEST VOLTAGE @ 15.75 kHz = 0.5 V

SECONDARY INDUCTANCE = 5.0 mH MIN
SECONDARY TURNS= 50

3 SPECIFICATIONS @ 25 °C :

WIRE: UL RECOGNIZED 130 °C RATED MAGNET WIRE
CWS BYTEMARK OR OTHER APPROVED PART
2 CORE: FERRITE TOROID

BOBBIN RATING CLASS B (130 °C) REQUIRED
1 MATERIAL: UL RECOGNIZED 94V-0 FOR FLAMMABILITY

NOTES: UNLESS OTHERWISE SPECIFIED. CURRENT SENSOR.
UNIT: INCHES [MM]

QTY	CODE IDENT	MFG. P/N	DESCRIPTION	ITEM NO.

PARTS LIST

AUTOCAD		X
SOLIDWORKS		
SIGN		DATE
DRAWN	RPR	5/19/04
CHECKED	JLAU	5/19/04
ENGR.	KSUM	5/19/04
APPR.	JLAU	5/19/04

UNLESS OTHERWISE SPECIFIED
DIMENSIONING AND TOLERANCE PER ANSI Y14.5M
ALL DIMENSIONS ARE IN INCHES AND [MILIMETERS].
TOLERANCE INCHES:
.XXX=±.010 .XX=±.020 ∠=±0°30'
TOLERANCE METRICS:
.XXX=±.254 .XX=±.51 ∠=±0°30'
ANGLE PROJECTION
DO NOT SCALE DRAWING

COILWS COM, INC
WWW.coilws.com
CWS Coil Winding Specialist.
1510 E. Edinger Ave.
Unit B. Santa Ana, CA. 92705

TITLE: Current Sense Transformer

SIZE B | DWG. NO. 72-101 | REV A

SCALE 2=1 | SHEET 1 OF 1

CAD-FILE: