REVISION HISTORY						
REV	ECN	DESCRIPTION	SIGN & DATE			
			BY	DATE	CHK	DATE
A		PRODUCTION RELEASE	TDK	5/19/04	JLAU	5/19/04

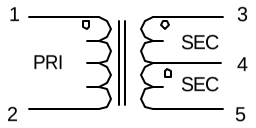

SCHEMATIC

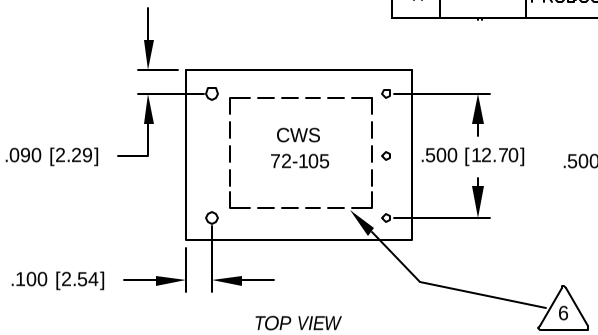

TOP VIEW

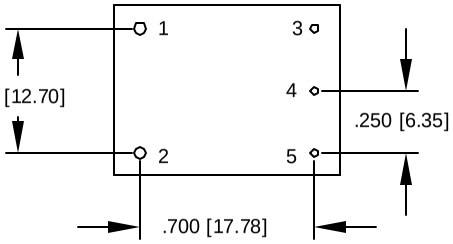

MOUNTING HOLES PATTERN

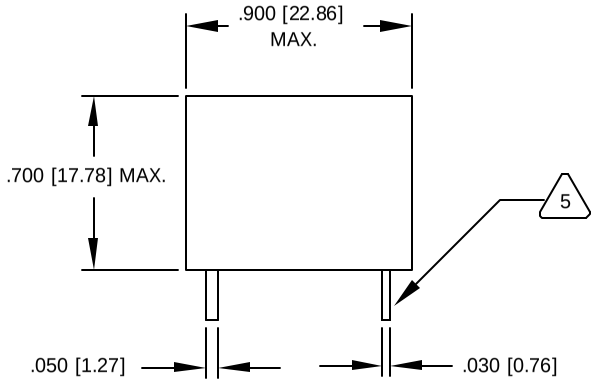

FROM VIEW

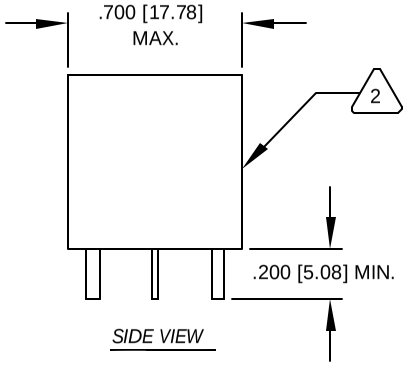

SIDE VIEW

6 WHERE SHOWN
MARK PART NUMBER AND REVISION

5 REMOVE INSULATION, SOLDERED TO LEADS

4 CONSTRUCTION: ENCAPSULATED USING BOBBIN.

FREQ. RANGE = 20 KHz TO 200 KHz
OPERATING TEMP. = - 25 °C TO 125 °C
HI-POT PRIMARY TO SECONDARY = 3750 Vrms
ONE TURN PRIMARY PEAK SENSE CURRENT = 20 A
PRIMARY BIPOLAR = 300 AMPS-uSEC RATING MAX
PRIMARY UNIPOLAR = 150 AMPS-uSEC RATING MAX

SECONDARY RATED TERMINATING RESISTANCE = 50 OHMS NOMINAL
SECONDARY DCR = 0.7 OHMS MAX
SECONDARY INDUCTANCE TEST VOLTAGE @ 15.75 kHz = 0.5 V

SECONDARY INDUCTANCE = 5.0 mH MIN
SECONDARY TURNS = 50 CT

3 SPECIFICATIONS @ 25 °C :

WIRE: UL RECOGNIZED 130 °C RATED MAGNET WIRE
CWS BYTEMARK OR OTHER APPROVED PART

2 CORE: FERRITE TOROID

BOBBIN RATING CLASS B (130 °C) REQUIRED

1 MATERIAL: UL RECOGNIZED 94V-0 FOR FLAMMABILITY

NOTES: UNLESS OTHERWISE SPECIFIED. CURRENT SENSOR.
UNIT: INCHES [MM]

QTY	CODE IDENT	MFG. P/N	DESCRIPTION	ITEM NO.

PARTS LIST

AUTOCAD		X
SOLIDWORKS		
SIGN		DATE
DRAWN	RPR	5/19/04
CHECKED	JLAU	5/19/04
ENGR.	KSUM	5/19/04
APPR.	JLAU	5/19/04

UNLESS OTHERWISE SPECIFIED
DIMENSIONING AND TOLERANCE PER ANSI Y14.5M
ALL DIMENSIONS ARE IN INCHES AND [MILIMETERS].
TOLERANCE INCHES: .XXX=±.010 .XX=±.020 ∠=±0°30'
TOLERANCE METRICS: .XXX=±.254 .XX=±.51 ∠=±0°30'
ANGLE PROJECTION
DO NOT SCALE DRAWING

COILWS COM, INC
www.coilws.com
CWS Coil Winding Specialist.
1510 E. Edinger Ave.
Unit B. Santa Ana, CA. 92705

TITLE: Current Sense Transformer

SIZE B | DWG. NO. 72-105 | REV A

SCALE 2=1 | SHEET 1 OF 1

CAD-FILE: