The information contained in this drawing is the sole property of CWS Coil Winding Specialist.
Any reproduction in part or whole without written permission of CWS Coil Winding Specialist is prohibited.

REVISION HISTORY

REV	ECN	DESCRIPTION	SIGN & DATE BY	DATE	CHK	DATE
A		PRODUCTION RELEASE	TDK	7/22/04	TDK	7/22/04

6 USING PERMANENT MARKING METHODS
IF REQUIRED, MARK CWS PART NUMBER

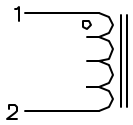

SCHEMATIC

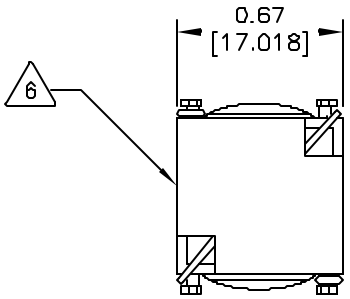

TOP VIEW

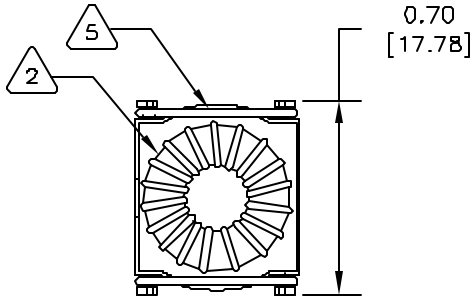

BOTTOM VIEW

5 LEADS MUST BE CO-PLANAR WITH FLAT SURFACE
REMOVE INSULATION, TIN LEADS SECTION THAT WRAP AROUND BOBBIN

WIND COILS EVENLY SPACED

4 CONSTRUCTION:

HI-POT TEST FOR WINDING TO CORE ISOLATION = 500 VDC MIN
SRF = 4.0 MHz MIN.
CURRENT RATING = 3.14 AMPS, 40 °C TEMP. RISE, NO AIR FLOW
DCR = 55.0 MILLI-OHMS

DC BIAS OF 2.2 AMPS, INDUCTANCE = 80.0 UH
L= 100 uH ± 10 % @ LOW DC BIAS, 1 KHz; 250 mV

3 SPECIFICATIONS:

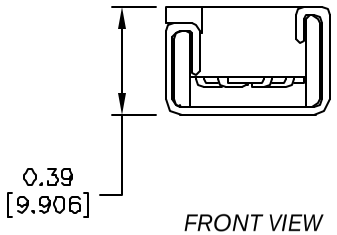

FRONT VIEW

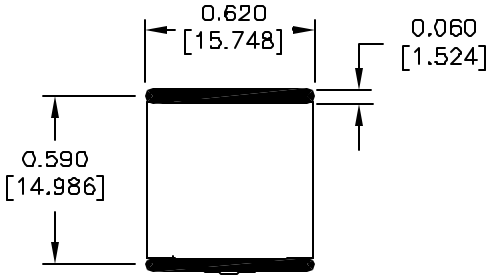

MOUNTING HOLES PATTERN

2 WIRE: UL RECOGNIZED 155°C RATED MAGNET WIRE
CWS BYTEMARK OR OTHER APPROVED PART
CORE: COATED HIGH FLUX TOROID

RATING CLASS B (130°C MIN.) REQUIRED

1. MATERIAL: UL RECOGNIZED 94V-0 FLAMMABILITY

NOTES: SURFACE MOUNT INDUCTOR

	CODE IDENT	MFG. P/N	DESCRIPTION	ITEM NO.

PARTS LIST

AUTOCAD	X	
SOLIDWORKS		
SIGN		DATE
DRAWN	RPR	7/22/04
CHECKED	TDK	7/22/04
ENGR.	JLAU	7/22/04
APPR.	JLAU	7/22/04

UNLESS OTHERWISE SPECIFIED
DIMENSIONING AND TOLERANCE PER ANSI Y14.5M
ALL DIMENSIONS ARE IN INCHES AND [MILLIMETERS].
TOLERANCE INCHES: .XXX=±.005 .XX=±.015 ∠=±0°30'
TOLERANCE METRICS: .XXX=±.127 .XX=±.38 ∠=±0°30'
ANGLE PROJECTION
DO NOT SCALE DRAWING

COILWS COM, INC
www.coilws.com

CWS Coil Winding Specialist.
1510 E. Edinger Ave.
Unit B, Santa Ana, CA. 92705

TITLE: Surface Mount Power Chokes

SIZE B | DWG. NO. SHF127-101M-3.2A | REV A

SCALE 1=1 | SHEET 1 OF 1

EP FORM0005 REV 3 10/01

CAD-FILE: