The information contained in this drawing is the sole property of CWS Coil Winding Specialist.
Any reproduction in part or whole without written permission of CWS Coil Winding Specialist is prohibited.

REVISION HISTORY						
REV	ECN	DESCRIPTION	SIGN & DATE			
			BY	DATE	CHK	DATE
A		PRE-PRODUCTION RELEASE				

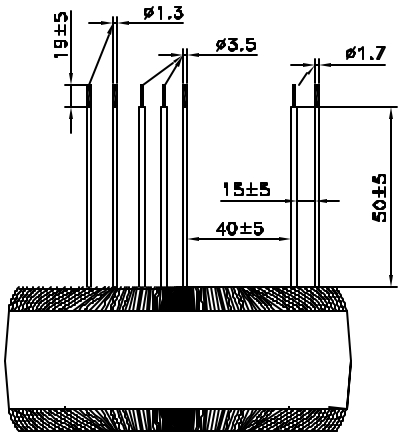

FRONT VIEW

SCHEMATIC

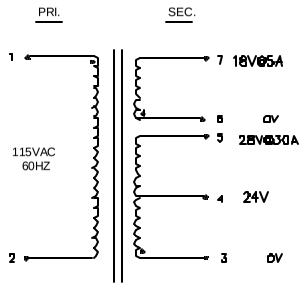

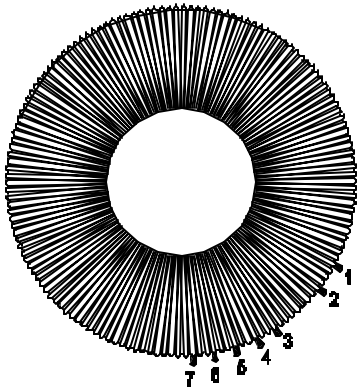

TOP VIEW

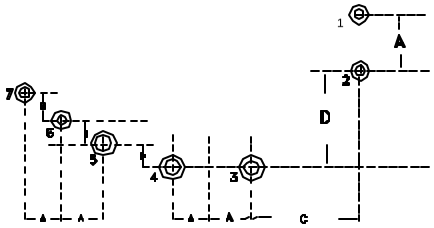

A=15 ±3 C=40 ±5
B=8±3 B=25 ±5

FOOT PRINT

NOTES:
1. UNIT:mm

QTY	CODE IDENT	MFG. P/N	DESCRIPTION	ITEM NO.

PARTS LIST

AUTOCAD	X	
SOLIDWORKS		
SIGN	DATE	
DRAWN		
CHECKED		
ENGR.		
APPR.		

COILWS COM, INC
WWW.coilws.com

CWS Coil Winding Specialist.
1510 E. Edinger Ave.
Unit B. Santa Ana, CA. 92705

UNLESS OTHERWISE SPECIFIED
DIMENSIONING AND TOLERANCE PER ANSI Y14.5M
ALL DIMENSIONS ARE IN INCHES AND [MILIMETERS].
TOLERANCE INCHES:
.XXX=±.010 .XX=±.020 ∠=±0°30'
TOLERANCE METRICS:
.XXX=±.254 .XX=±.51 ∠=±0°30'
ANGLE PROJECTION
DO NOT SCALE DRAWING

TITLE: Tape Wound Transformer

SIZE B | DWG. NO. XXXXXX | REV A

SCALE 2=1 | SHEET 1 OF 1

EP FORM0005 REV 3 10/01

CAD-FILE: