The information contained in this drawing is the sole property of CWS Coil Winding Specialist.
Any reproduction in part or whole without written permission of CWS Coil Winding Specialist is prohibited.

REVISION HISTORY

REV	ECN	DESCRIPTION	SIGN & DATE BY	DATE	CHK	DATE
A		PRODUCTION RELEASE	TN	02/25/21	JL	02/25/21

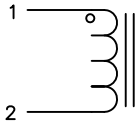

SCHEMATIC

7 BUILD TO ROHS COMPLIANCE

6 MARK PART NUMBER, REVISION AND DATE CODE
WRAP INDUCTOR WITH GLASS TAPE

5 COVER JOINTS WITH HEATSHRINK TUBING
RING TERMINAL (X2). CRIMP THEN SOLDER AND
REMOVE INSULATION AND TIN LEADS THEN INSTALL M6

4 WIND COILS EVENLY SPACED AROUND THE CORE
CONSTRUCTION:

WEIGHT: 454 GRAMS TYP
OPERATING TEMPERATURE RANGE: -40°C TO 180°C
TEMPERATURE RISE: 40°C WITH SOME AIR FLOW.
INDUCTOR RATED CURRENT: 35 AMPS
INTERWINDING CAPACITANCE = 45pF TYP @ SRF
SRF = 2 MHz TYPICAL
|Z| = 40 KIILO-OHMS TYP @ SRF
DCR = 20.0 MILLI-OHMS MAX.
DC BIASED: SEE TABLE ON THE RIGHT
INDUCTANCE = 120 uH NOM. @ LOW DC BIAS, 1 KHz, 250mV

3 SPECIFICATIONS @ 25°C:

WIRE: UL RECOGNIZED 200°C RATED MAGNET WIRE
CWS BYTEMARK OR OTHER APPROVED PART

2 CORE: COATED POWDERED TOROIDAL CORE

RATING CLASS H (180°C MIN.) REQUIRED

1 MATERIAL: UL RECOGNIZED 94V-0 FOR FLAMMABILITY

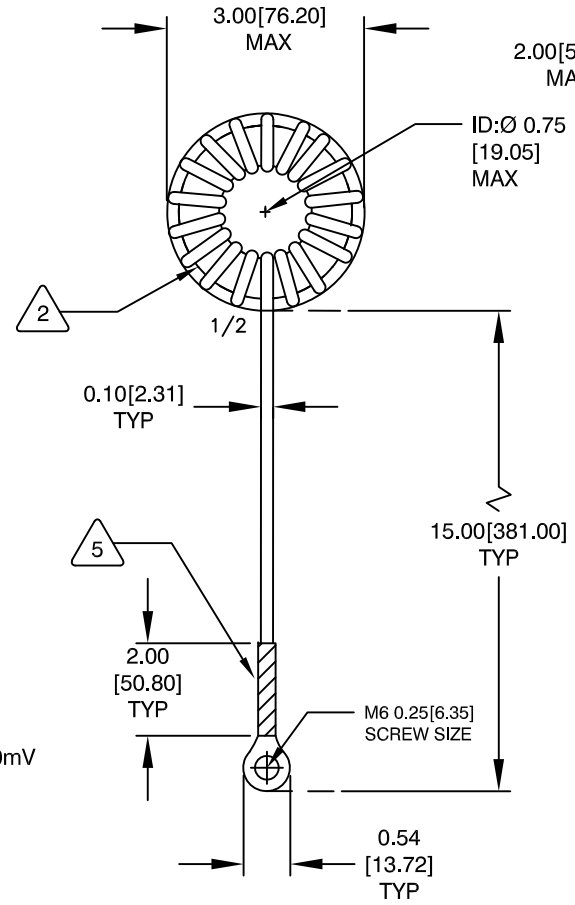

FRONT VIEW

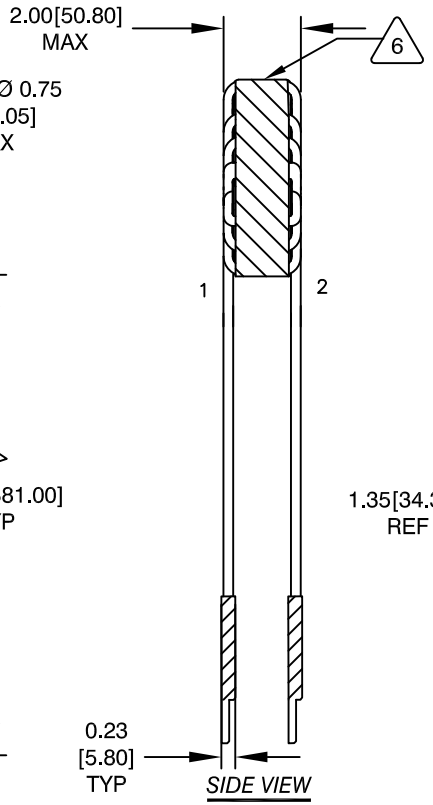

SIDE VIEW

DC BIAS TABLE

DC BIAS (AMP)	L @1KHz (TYP)
0	123uH
5	120uH
10	116uH
15	112uH
20	106uH
25	103uH
30	100uH
35	90uH

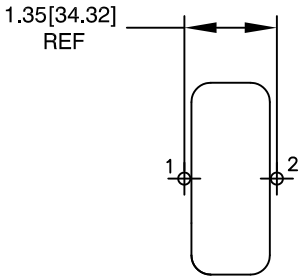

MOUNTING PATTERN

ANY TOLERANCE. THIS DIM. CAN VARY A LITTLE FROM PART TO PART.
"TYP" IN DIM. TOL. REFERS TO A NON-CRITICAL TYPICAL (AVERAGE) DIM. WITHOUT

NOTES: UNLESS OTHERWISE SPECIFIED, READ NOTES FROM BOTTOM UP.

CAGE CODE: 5DME2

CODE IDENT	MFG. P/N	DESCRIPTION	ITEM NO.

PARTS LIST

UNLESS OTHERWISE SPECIFIED
DIMENSIONING AND TOLERANCE PER ANSI Y14.5M
ALL DIMENSIONS ARE IN INCHES AND [MILIMETERS].
TOLERANCE INCHES: .XXX=±.005 .XX=±.015 ∢=±0°30'
TOLERANCE METRICS: .XXX=±.127 .XX=±.38 ∢=±0°30'
ANGLE PROJECTION
DO NOT SCALE DRAWING

AUTOCAD	X	
SOLIDWORKS		
SIGN		DATE
DRAWN	TN	02/25/21
CHECKED	JM	02/25/21
ENGR.	JL	02/25/21
APPR.	JL	02/25/21

COILWS COM, INC
www.coilws.com
CWS Coil Winding Specialist.
353 W Grove Ave
Orange, CA 92865

TITLE: Toroidal Power Inductor
120 uH, 35 Amps, Vertical Mount

SIZE B | DWG. NO. CWS-1SN-13004 | REV A

SCALE NOT_TO_SCALE | SHEET 1 OF 1

CAD-FILE: