The information contained in this drawing is the sole property of CWS Coil Winding Specialist.
Any reproduction in part or whole without written permission of CWS Coil Winding Specialist is prohibited.

DIMENSIONAL TOLERANCES
INCHES [MM]

A MAX	B MAX	C MAX	D TYP	X TYP	Y TYP	Z TYP
2.65 [67.31]	2.20 [55.88]	0.50 [12.70]	0.14 [3.45]	0.69 [17.60]	0.39 [10.04]	0.15 [3.81]

REVISION HISTORY

REV	ECN	DESCRIPTION	SIGN & DATE BY	DATE	CHK	DATE
A	-	INITIAL RELEASE	TN	06/03/2020	JL	06/03/2020
B	-	UPDATED SPECS.	TI	06/29/2020	JL	06/29/2020
B1		REVISED A & B MAX DIMENSION	TN	04/30/21	JL	04/30/21

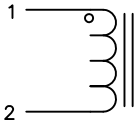

SCHEMATIC

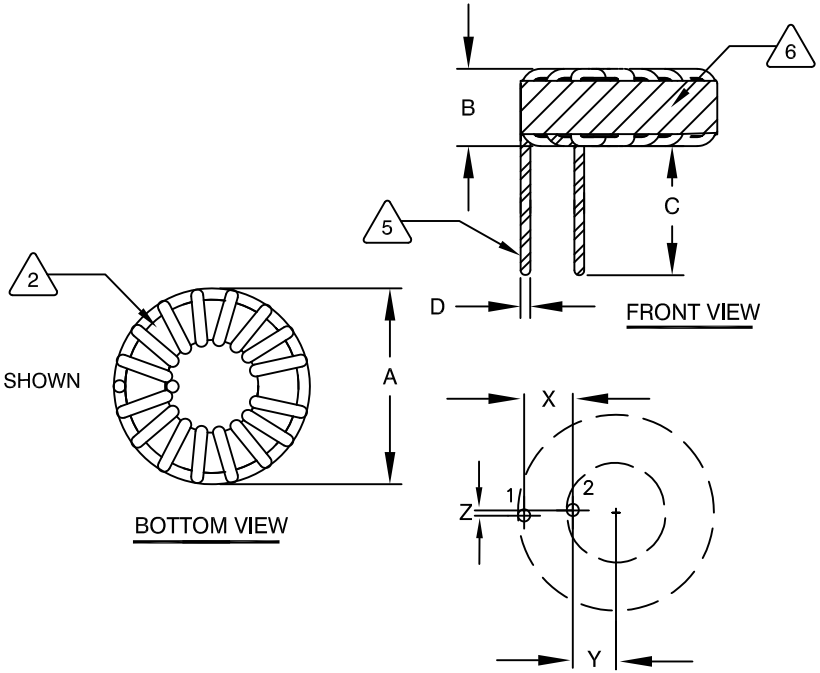

DC BIAS TABLE

DC BIAS (AMP)	L @ 1.0 KHz
0	100uH
5	98uH
10	97uH
15	95uH
20	94uH
30	89uH
40	83uH
50	75uH

7 BUILD TO RoHS COMPLIANCE AND LEAD FREE.
USING A PERMANENT MARKING METHOD
MARK PART NUMBER AND REVISION, IF APPLICABLE

6 WRAP INDUCTOR WITH 3M # 79 OR EQUAL

5 (I.E. COIL MUST REST FLAT ON PCB). LEADS MUST BE TANGENT TO THE CORE
REMOVE INSULATION AND TIN LEADS 0.50 INCH, FLUSH WITH THE COIL EDGE, AS SHOWN

4 WIND COILS EVENLY SPACED AROUND THE CORE
CONSTRUCTION:
THESE SPECIFICATIONS ARE BASED ON LOW RIPPLE CURRENT
WEIGHT: 515 GRAMS TYPICAL
INTERWINDING CAPACITANCE = 18pF TYP @ SRF
SRF =3.8MHz TYPICAL
|Z| = 17.4 KILO-OHMS TYP @ SRF
RECOMMENDED AMBIENT OPERATING TEMP: -40°C TO 180°C
HI-POT TEST FOR WINDING TO CORE ISOLATION = 1250 VDC 10 SEC
CURRENT RATING : 50 AMPS, 50°C TEMP. RISE WITH SOME AIR FLOW
DCR = 4.0 MILLI-OHMS MAX.
INDUCTOR DC BIAS: SEE TABLE ON THE RIGHT
INDUCTANCE = 100uH±15% @ 0 AMP DC BIAS, 1.0 KHz, 300mV

3 SPECIFICATIONS @ 25°C :

2 WIRE: UL RECOGNIZED 200°C RATED MAGNET WIRE
CORE: POWDERED TOROIDAL CORE,CWS BYTEMARK OR OTHER APPROVED PART

1 MATERIAL: UL RECOGNIZED 94V-0 FOR FLAMMABILITY,RATING CLASS H (180°C MIN.) REQUIRED

ANY TOLERANCE. THIS DIM. CAN VARY A LITTLE FROM PART TO PART.
"TYP" IN DIM. TOL. TABLE REFERS TO A NON-CRITICAL TYPICAL (AVERAGE) DIM. WITHOUT
NOTES: UNLESS OTHERWISE STATED, READ NOTES FROM BOTTOM UP.
CAGE CODE: 5DME2

	CODE IDENT	MFG. P/N	DESCRIPTION	ITEM NO.

PARTS LIST

UNLESS OTHERWISE SPECIFIED
DIMENSIONING AND TOLERANCE PER ANSI Y14.5M
ALL DIMENSIONS ARE IN INCHES AND [MILIMETERS].
TOLERANCE INCHES: .XXX=±.005 .XX=±.015 ∢=±0°30'
TOLERANCE METRICS: .XXX=±.127 .XX=±.38 ∢=±0°30'
ANGLE PROJECTION
DO NOT SCALE DRAWING

		SIGN	DATE
AUTOCAD	X		
SOLIDWORKS			
DRAWN	TN		06/03/2020
CHECKED	JL		06/03/2020
ENGR.	JL		06/03/2020
APPR.	JL		06/03/2020

COILWS COM, INC
www.coilws.com

CWS Coil Winding Specialist.
353 W Grove Ave
Orange, CA. 92865

TITLE: TOROIDAL POWER INDUCTOR
100uH, 50 Amps, Horizontal

SIZE B | DWG. NO. HF4672-101M-50AH | REV B1

SCALE 2=1 | SHEET 1 OF 1

EP FORM0005 REV 3 10/01

CAD-FILE: