The information contained in this drawing is the sole property of Coil Winding Specialist Inc. (CWS)
Any reproduction in part or whole without written permission of CWS Coil Winding Specialist is prohibited.

DIMENSIONAL TOLERANCE INCHES [MM]

A Max	B Max	C(HGT) Max	D(LEAD) Typ	E(Ø DIM) Typ			X Ref	Y Ref
2.756 [70.00]	2.756 [70.00]	1.772 [45.00]	.500 [12.70]	.268x.083 [6.80x2.10]			.787 [20.00]	NA

REVISION HISTORY

REV	ECN	DESCRIPTION	SIGN & DATE BY	DATE	CHK	DATE
A		PRELIMINARY DESIGN	JL	02/22/17	JM	2/22/17

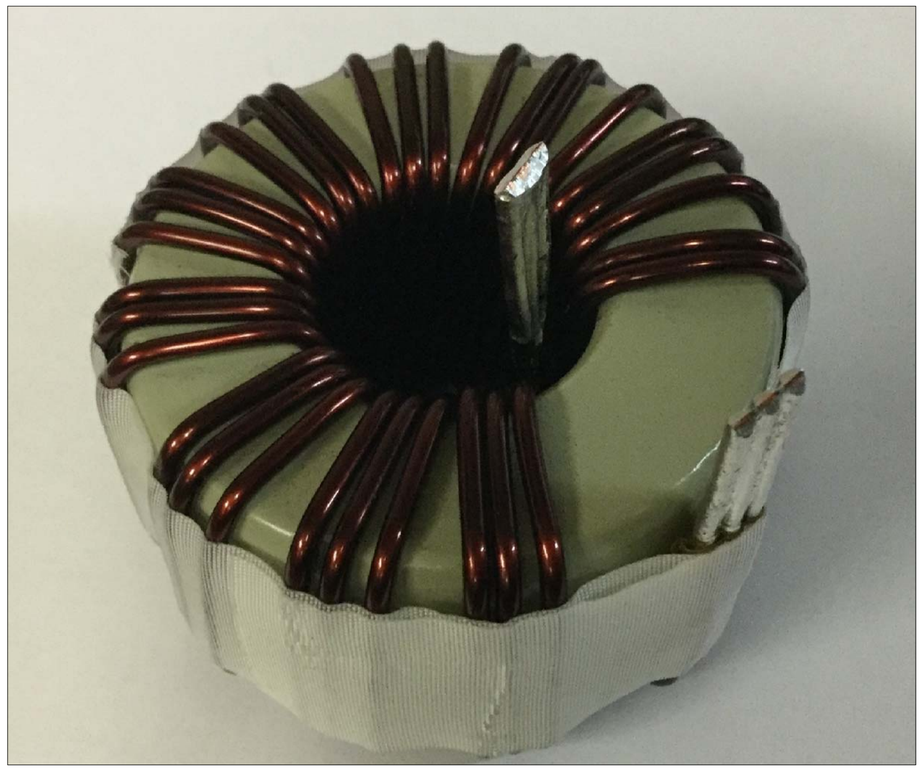

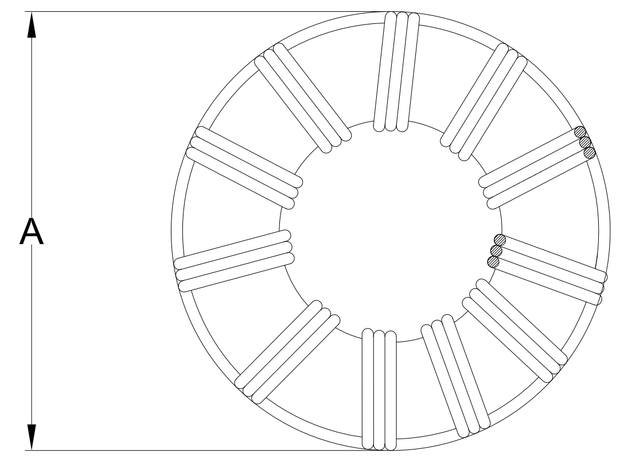

TOP VIEW

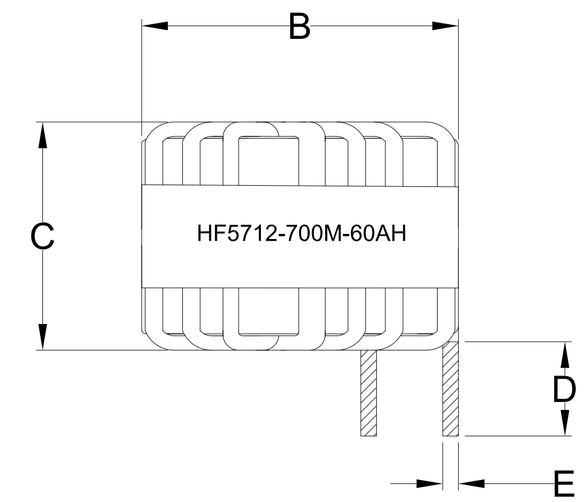

FRONT VIEW

DC Bias	
0 Amp	68 uH
5 Amp	68 uH
10 Amp	67 uH
15 Amp	67 uH
20 Amp	65 uH
25 Amp	64 uH
30 Amp	62 uH
35 Amp	60 uH
40 Amp	57 uH
45 Amp	55 uH
50 Amp	53 uH

7 BUILT TO RoHS COMPLIANCE.

6 IF APPLICABLE, LABEL PART NUMBER AND REVISION

POSITION LEADS AS REQUIRED
REMOVE WIRE INSULATION AND TIN
WIND COILS EVENLY SPACED
5 CONSTRUCTION:

4 WEIGHT: ~600 GRAMS

HI-POT WINDING-TO-CORE 1250 V AC, 10 SEC
INTERWINDING CAPACITANCE 6.7pF TYPICAL @ SRF
DCR=2.5mΩ MAX
SRF ~ 6500kHz TYPICAL
MAX TEMP. RISE @ IDC 60 AMP, LESS THAN 50°C WITH NO AIRFLOW
INDUCTANCE @ 0 AMP = 70uH±15% (LESS THAN 10% RIPPLE)
TEST FREQUENCY: 1.0 kHz ; TEST VOLTAGE: 250mV
RATED MAX. CURRENT = 60 AMPS RMS ; FREQUENCY: 1kHz
OPERATING TEMPERATURE RANGE : -40° TO 180°C
3 SPECIFICATIONS @ 25°C

WIRE: UL RATED CLASS 200°C
2 CORE: HIGH TEMP POWDERED CORE

RATING UL-CLASS H (180°C) REQUIRED
1 MATERIAL: UL RECOGNIZED FLAMMABILITY

NOTES: UNLESS OTHERWISE SPECIFIED. READ NOTES FROM BOTTOM TO UP.

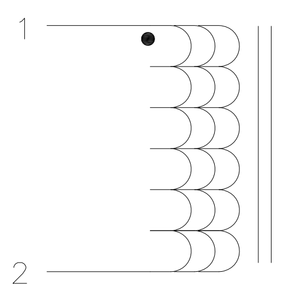

SCHEMATIC

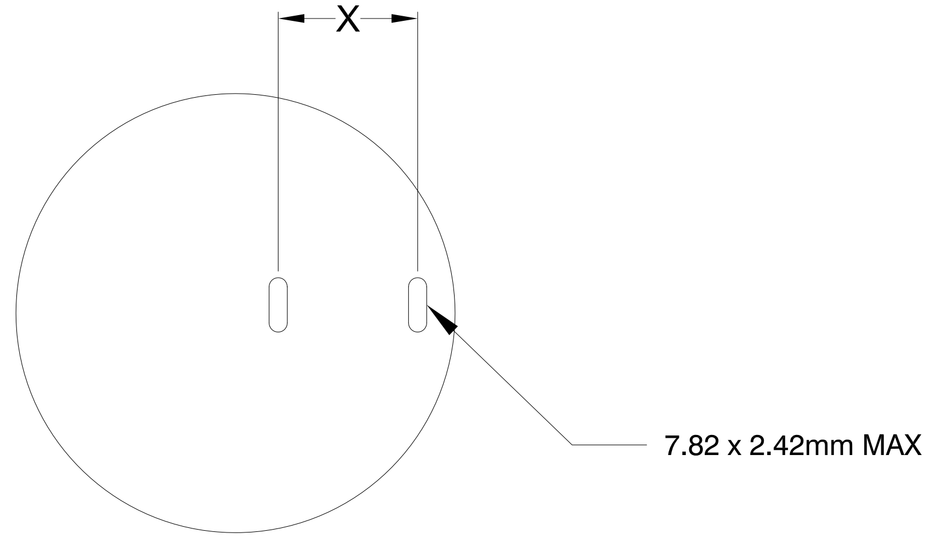

MOUNTING HOLE PATTERN (TOP VIEW)

UNLESS OTHERWISE SPECIFIED
DIMENSIONING AND TOLERANCE PER ANSI Y14.5M
ALL DIMENSIONS ARE IN INCHES AND [MILIMETERS].
TOLERANCE INCHES: .XXX=±.005 .XX=±.015 ∠=±0°30'
TOLERANCE METRICS: .XXX=±.127 .XX=±.38 ∠=±0°30'
ANGLE PROJECTION
DO NOT SCALE DRAWING

	SIGN	DATE
AUTOCAD		
SOLIDWORKS		
DRAWN	JL	02/22/17
CHECKED	JM	02/22/17
ENGR.	JM	02/22/17
APPR.	JM	02/22/17

www.coilws.com
sales@coilws.com
CWS Coil Winding Specialist
353 West Grove Ave
Orange, California. 92865 (CAGE 5DME2)

TITLE: **POWER INDUCTOR 70uH, 60Amp, Horizontal**

SIZE B | DWG. NO. **HF5712-700M-60AH** | REV A

SCALE N/A | SHEET 1 OF 1

CAD-FILE: