The information contained in this drawing is the sole property of Coil Winding Specialist Inc. (CWS)
Any reproduction in part or whole without written permission of CWS is prohibited.

DIMENSIONAL TOLERANCE INCHES [MM]

A(WDTH) Max	B(HGHT) Max	C(LEAD) Min	D(LEAD DIM) TYP	E (Min/Max)	P1 Ref	P2 Ref
1.97 [50.0]	1.26 [32.0]	0.5 [12.7]	0.06x0.12 [1.45x2.9]		1.36 [34.6]	1.36 [34.6]

REVISION HISTORY

REV	ECN	DESCRIPTION	SIGN & DATE BY	DATE	CHK	DATE
A	1	PRODUCTION RELEASE	KC	12/16/10	JLAU	12/16/10
B	2	ELECTRICAL, DIMENSION UPDATES	AK	04/16/12	JLAU	04/16/12

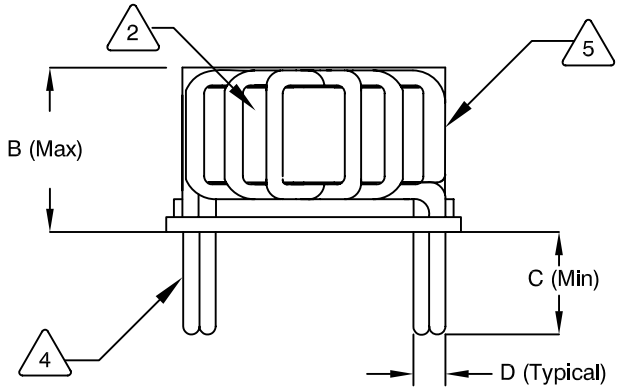

FRONT VIEW

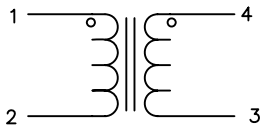

SCHEMATIC

6 BUILT TO RoHS COMPLIANCE AND LEAD FREE.

5 MARK PART NUMBER AND REVISION IF APPLICABLE.

4 TIN LEADS APPROX. 0.5 INCH AND FLUSH WITH THE COIL EDGE.

WEIGHT = 135 GRAMS
OPERATING TEMP RANGE = -25 °C TO 120°C
MAX TEMP RISE = 40 °C
INTERWINDING ISOLATION = 2000 VOLTS RMS.
DCR ON EACH WINDING = 10.0 mΩ MAX.
SRF =355 KHz TYP
RATED VOLTAGE = 750 VAC OR VDC
RATED CURRENT = 24 AMPS
LEAKAGE INDUCTANCE = 14.7 uH TYP @ 10 KHz, 1 Vrms.
INTERWINDING CAPACITANCE= 8.84pF TYP @ 10KHz.
IMPEDANCE = 8.4 kΩ NOM @ SRF
L = 20 mH MIN @ 1 KHz, 1 Vrms, 0 ADC
INSULATION RESISTANCE = 100 MEGA-OHMS MIN. @ 500 VDC

3 SPECIFICATIONS AT 25°C:

WIRE: UL RECOGNIZED 200°C RATED MAGNET WIRE
CWS BYTEMARK OR OTHER APPROVED PART
2 CORE: NANOCRYSTALLINE OR AMORPHOUS CORE

BOBBIN RATING CLASS B (200°) REQUIRED
1 MATERIAL: UL RECOGNIZED 94V-0 FOR FLAMMABILITY

NOTES: UNLESS OTHERWISE SPECIFIED. READ NOTES FROM BOTTOM TO TOP.

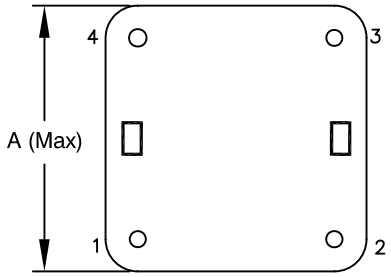

BOTTOM VIEW

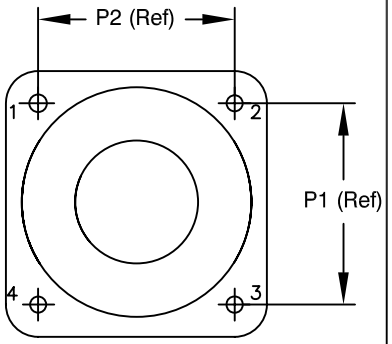

MOUNTING HOLES PATTERN

QTY	CODE IDENT	MFG. P/N	DESCRIPTION	ITEM NO.

PARTS LIST

UNLESS OTHERWISE SPECIFIED
DIMENSIONING AND TOLERANCE PER ANSI Y14.5M
ALL DIMENSIONS ARE IN INCHES AND [MILIMETERS].
TOLERANCE INCHES: .XXX=±.005 .XX=±.015 ∢=±0°30'
TOLERANCE METRICS: .XXX=±.127 .XX=±.38 ∢=±0°30'
ANGLE PROJECTION
DO NOT SCALE DRAWING

AUTOCAD	X	
SOLIDWORKS		
SIGN		DATE
DRAWN	RLAU	12/16/10
CHECKED	AK	12/16/10
ENGR.	JLAU	12/16/10
APPR.	JLAU	12/16/10

www.coilws.com
sales@coilws.com
Coil Winding Specialist Inc.
353 West Grove Ave
Orange, California. 92865

TITLE: Nanocrystalline Inductor
Common Mode Chokes
Horizontal Mount

SIZE B | DWG. NO. KN-H-203U-24A | REV B

SCALE 2=1 | SHEET 1 OF 1

CAD-FILE: