The information contained in this drawing is the sole property of CWS Coil Winding Specialist.
Any reproduction in part or whole without written permission of CWS Coil Winding Specialist is prohibited.

MECHANICAL DIMENSION					
H MAX	L MAX	W MAX	LEAD OD TYP	X REF	Y REF
0.91 [23.11]	0.86 [21.84]	0.60 [15.24]	0.05 [1.27]	0.84 [21.34]	0.40 [10.16]

REVISION HISTORY						
REV	ECN	DESCRIPTION	SIGN & DATE			
			BY	DATE	CHK	DATE
A		PRODUCTION RELEASE	TN	2/9/18	JL	2/9/18

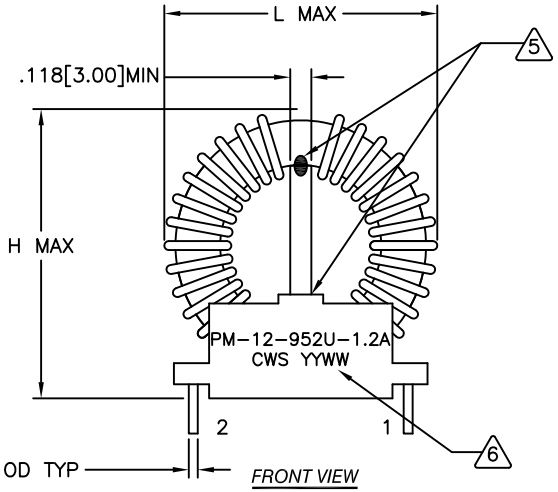

FRONT VIEW

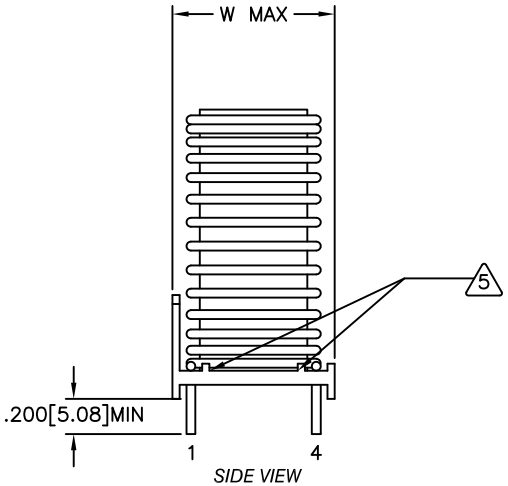

SIDE VIEW

7 BUILT TO RoHS COMPLIANCE AND LEAD FREE

6 MARK PART NUMBER, REVISION AND DATE CODE

5 ADD EPOXY WHERE SHOWN

OR INSERT THRU BASE
SOLDER LEADS ONTO THE BASE PIN PER DWG
REMOVE WIRE INSULATION
WIND COILS EVENLY SPACED

4 CONSTRUCTION:

WEIGHT: 14.2 GRAMS (TYP)
OPERATING TEMP. RANGE: −40°C TO 95°C
HI−POT FOR WINDING TO WINDING = 1250 VAC, 10 SEC
INTERWINDING CAPACITANCE 7pF TYPICAL
LEAKAGE INDUCTANCE 46uH TYPICAL
|Z| = 23KΩ TYP. @ SRF
SRF = 716KHz TYPICAL
RATED CURRENT = 1.2 AMPS RMS MAX
DCR = 150 MILLI−OHMS MAX PER WINDING
INDUCTANCE = 9.5mH MIN

3 SPECIFICATIONS @ 25°C, 10KHz, 250 mV

WIRE: UL RECOGNIZED 155°C RATED MAGNET WIRE
FR4 SPACER: 3.00 MM MINIMUM THICKNESS
HEADER: UL CERTIFIED TOROID BASE

2 CORE: HIGH PERM MANGANESE ZINC

RATING UL−CLASS B (130°) REQUIRED

1 MATERIAL: UL RECOGNIZED 94V−0 FLAMMABILITY FOR BOBBIN

NOTES: UNLESS OTHERWISE SPECIFIED. READ FROM BOTTOM UP.

CAGE CODE: 5DME2

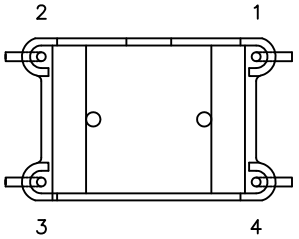

BOTTOM VIEW

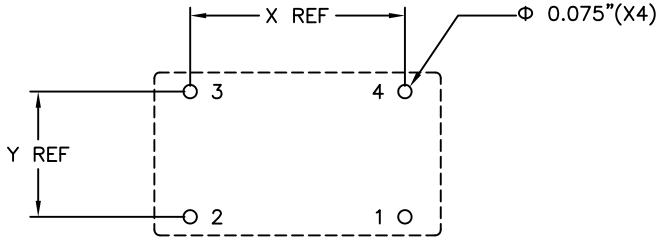

MOUNTING HOLES PATTERN

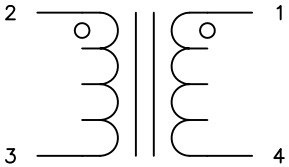

SCHEMATIC

	CODE IDENT	MFG. P/N	DESCRIPTION	ITEM NO.
PARTS LIST				

AUTOCAD	X	
SOLIDWORKS		
SIGN	DATE	
DRAWN TN	2/9/18	
CHECKED JL	2/9/18	
ENGR. JM	2/9/18	
APPR. JL	2/9/18	

UNLESS OTHERWISE SPECIFIED
DIMENSIONING AND TOLERANCE PER ANSI Y14.5M
ALL DIMENSIONS ARE IN INCHES AND [MILIMETERS].
TOLERANCE INCHES: .XXX=±.005 .XX=±.015 ∢=±0°30'
TOLERANCE METRICS: .XXX=±.127 .XX=±.38 ∢=±0°30'
ANGLE PROJECTION
DO NOT SCALE DRAWING

COILWS COM, INC
www.coilws.com

CWS Coil Winding Specialist.
353 W Grove Ave
Orange, CA 92865

TITLE: Common Mode Line Filter
9.50 mH MIN., 1.2 Amp

SIZE B | DWG. NO. PM−12−952U−1.2A | REV A

SCALE 2=1 | SHEET 1 OF 1

CAD−FILE:

EP FORM0005 REV 3 10/01