FOR REFERENCE ONLY

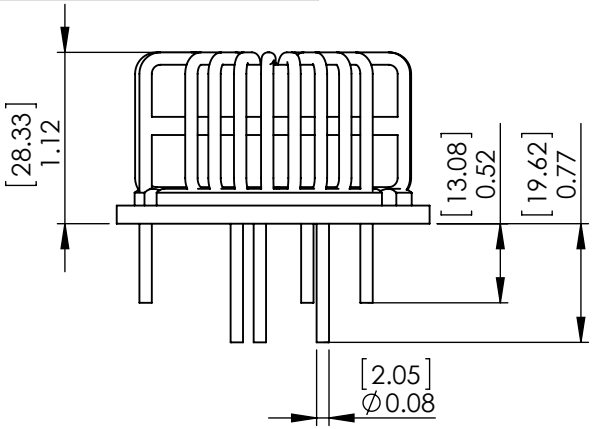

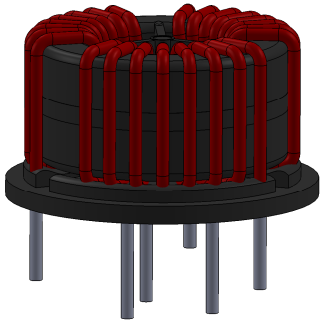

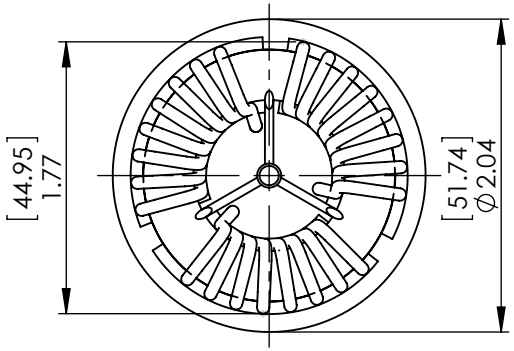

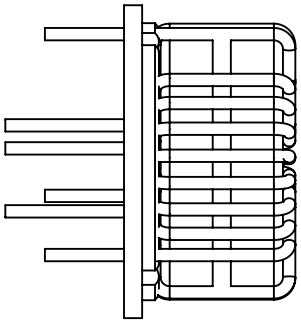

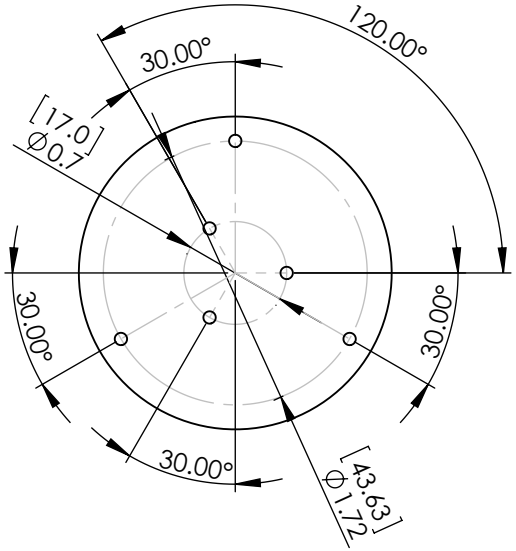

THE PART NUMBER ON THE WEBSITE.

4. PLEASE REFER TO OFFICIAL AUTOCAD PDF DRAWING BY CLICKING

3. DIMENSIONS ARE FOR REFERENCE ONLY WITH NO TOLERANCES.

THE SOLIDWORKS DRAWING.

2. DIMENSIONS SHOWN ARE FOR ONE TYPICAL UNIT USED IN

1. DRAWING DERIVED FROM SOLIDWORKS STEP FILE.

NOTES : UNLESS OTHERWISE SPECIFIED, READ FROM BOTTOM UP.

PROPRIETARY AND CONFIDENTIAL

THE INFORMATION CONTAINED IN THIS DRAWING IS THE SOLE PROPERTY OF COIL WINDING SPECIALIST, INC. ANY REPRODUCTION IN PART OR AS A WHOLE WITHOUT THE WRITTEN PERMISSION OF COIL WINDING SPECIALIST, INC. IS PROHIBITED.

UNLESS OTHERWISE SPECIFIED:		NAME	DATE
DIMENSIONS ARE IN INCHES TOLERANCES: FRACTIONAL ± ANGULAR: MACH ± BEND ± TWO PLACE DECIMAL ± THREE PLACE DECIMAL ±	DRAWN	JJ	08/27/20
	CHECKED	TN	08/27/20
	ENG APPR.	JL	08/27/20
	MFG APPR.	JL	08/27/20
INTERPRET GEOMETRIC TOLERANCING PER:	Q.A.	JM	08/27/20
MATERIAL	COMMENTS:		
FINISH			
DO NOT SCALE DRAWING			

PDF DERIVED FROM SOLIDWORKS

TITLE:

SolidWorks Version of Nanocrystalline Inductor Three-Phase Common Mode Choke Horizontal Mount

SIZE	DWG. NO.	REV
A	TPW-352U-B20A-SW	A

SCALE: 1:1.25 | WEIGHT: | SHEET 1 OF 1