Any reproduc-ained in this drawing is the sole property of CWS Coil Winding Specialist.

REVISION HISTORY						
REV	ECN	DESCRIPTION	SIGN & DATE			
			BY	DATE	CHK	DATE
A		INITIAL RELEASE	KLC	5/12/09	AM	5/12/09

7 BUILT TO RoHS COMPLIANCE AND LEAD FREE.

6 WHERE SHOWN, USING A PERMANENT MARKING METHOD MARK PART NUMBER AND REVISION IN APPROX

5 FLUSH WITH THE COIL EDGE, AS SHOWN REMOVE INSULATION AND TIN LEADS APPROX. 0.5 INCH

WIND ON EACH SIDE TO CORE AND EVENLY SPACED

4 CONSTRUCTION:

TEMP RANGE = -25 °C TO 120°C
MAX TEMP RISE = 40 °C
TEST VOLTAGE = 1000 VAC, @ 2 mA for 1 MIN.
TOTAL DCR OF BOTH WINDINGS = 20 MILLI-OHMS COMBINED.
RATED VOLTAGE = 250 VAC OR VDC
RATED CURRENT = 15 AMPS
L = 1.0 mH MIN., 10 KHz, 0.250 Vrms, 0 ADC
INSULATION RESISTANCE = 100 MEGA-OHMS MIN. @ 500 VDC

3 SPECIFICATIONS AT 25°C:

APPROVED PART
WIRE: UL RECOGNIZED 180°C RATED MAGNET WIRE
CWS BYTEMARK OR OTHER APPROVED PART
2 CORE: FERRITE TOROID, HIGH PERM MNZN

BOBBIN RATING CLASS B (130°) REQUIRED
1 MATERIAL: UL RECOGNIZED 94V-0 FOR FLAMMABILITY

NOTES: UNLESS OTHERWISE SPECIFIED.

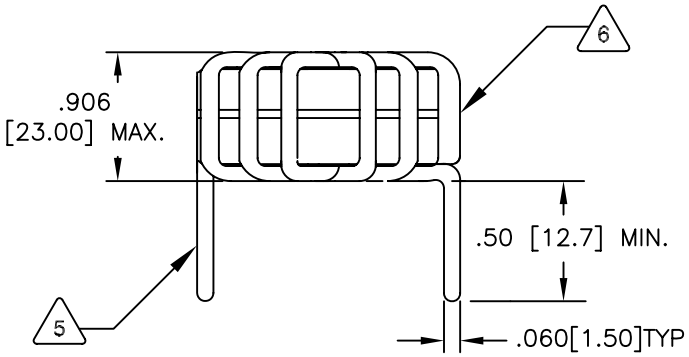

FRONT VIEW

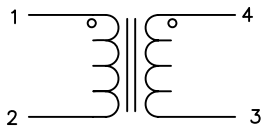

SCHEMATIC

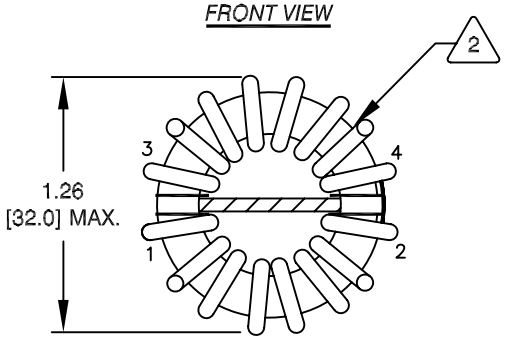

BOTTOM VIEW

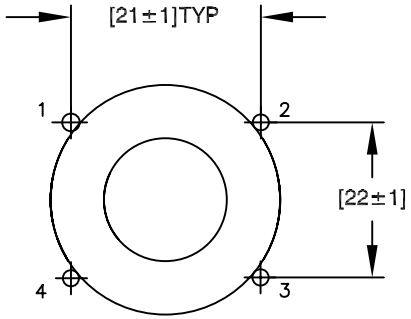

MOUNTING HOLES PATTERN

QTY	CODE IDENT	MFG. P/N	DESCRIPTION	ITEM NO.

PARTS LIST

AUTOCAD	X	
SOLIDWORKS		
SIGN		DATE
DRAWN	KLC	5/12/09
CHECKED	AM	5/12/09
ENGR.	KLC	5/12/09
APPR.	KLC	5/12/09

UNLESS OTHERWISE SPECIFIED
DIMENSIONING AND TOLERANCE PER ANSI Y14.5M
ALL DIMENSIONS ARE IN INCHES AND [MILIMETERS].
TOLERANCE INCHES: .XXX=±.005 .XX=±.015 ∢=±0°30'
TOLERANCE METRICS: .XXX=±.127 .XX=±.38 ∢=±0°30'
ANGLE PROJECTION
DO NOT SCALE DRAWING

COILWS COM, INC
www.coilws.com

CWS Coil Winding Specialist.
353 W. GROVE AVENUE
ORANGE CA. 92865

TITLE: Common Mode Chokes Horizontal Mount

SIZE B | DWG. NO. HL-H-102U-15A | REV A

SCALE 2=1 | SHEET 1 OF 1

EP FORM0005 REV 3 10/01

CAD-FILE: