REVISION HISTORY						
REV	ECN	DESCRIPTION	SIGN & DATE			
			BY	DATE	CHK	DATE
B		PRE-PRODUCTION RELEASE	TDK	9/15/04	JLAU	9/15/04

6 WHERE SHOWN, USING A PERMANENT MARKING METHOD
MARK PART NUMBER AND REVISION IN APPROX
WRAP INDUCTOR WITH TAPE, (PER NOTE 2)

TO THE CORE
MUST REST FLAT ON PCB). LEADS MUST BE TANGENT
FLUSH WITH THE COIL EDGE, AS SHOWN (I.E. COIL
5 REMOVE INSULATION AND TIN LEADS APPROX. 0.40 INCH

CORE AND EVENLY SPACED
WIND 5 TURNS, .060x .160 RECT. SINGLE LAYER ON EACH SIDE OF
4 CONSTRUCTION:

TO INSURE INTERGRITY OF WINDING SEPARATION
HI-POT TEST FOR INTERWINDING ISOLATION, 250VDC
POWER LOSS = 4.3 W MAX.@ 60A/COIL
DCR = 0.6 mOHMS MAX./COIL, MEASURED USING QUADTECH 2200
L = MEASURED AT 82.5 uH MIN/COIL <1 KHZ, 1Vrms>
3 SPECIFICATIONS:

APPROVED PART
OUTER WRAP: 3M #11 OR #69 OR OTHER CWS
WIRE: UL RECOGNIZED 200°C RATTING MAGNET WIRE
CWS BYTEMARK OR OTHER APPROVED PART
2 CORE: COATED FERRITE TOROID, HIGH PERM MNZN

CLASS B (130°C) REQUIRED
1 MATERIAL: UL RECOGNIZED 94V-0 FOR FLAMMABILITY

NOTES: UNLESS OTHERWISE SPECIFIED.

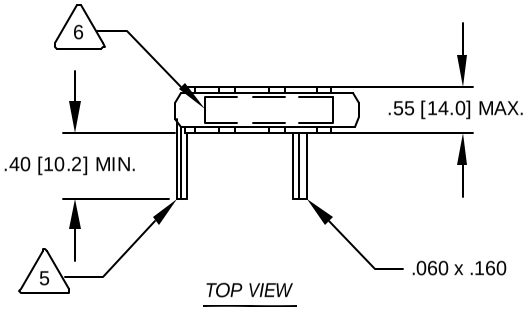

TOP VIEW

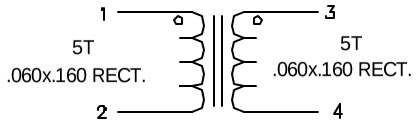

SCHEMATIC

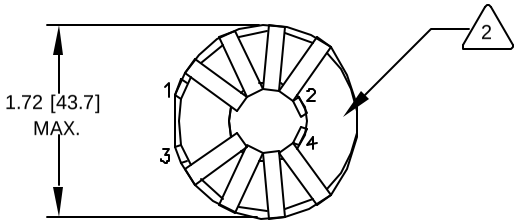

BOTTOM VIEW

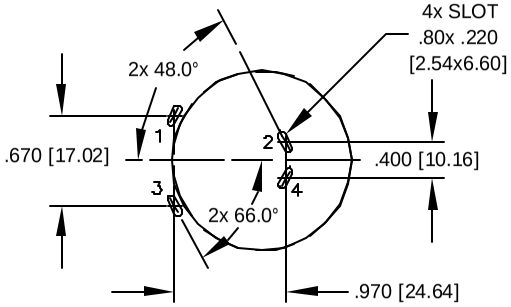

MOUNTING HOLES PATTERN

QTY	CODE IDENT	MFG. P/N	DESCRIPTION	ITEM NO.

PARTS LIST

AUTOCAD		X
SOLIDWORKS		
SIGN		DATE
DRAWN	TDK	9/15/04
CHECKED	JLAU	9/15/04
ENGR.	KSUN	9/15/04
APPR.	JLAU	9/15/04

UNLESS OTHERWISE SPECIFIED
DIMENSIONING AND TOLERANCE PER ANSI Y14.5M
ALL DIMENSIONS ARE IN INCHES AND [MILIMETERS].
TOLERANCE INCHES: .XXX=±.010 .XX=±.020 ∠=±0°30'
TOLERANCE METRICS: .XXX=±.254 .XX=±.51 ∠=±0°30'
ANGLE PROJECTION
DO NOT SCALE DRAWING

COILWS COM, INC
WWW.coilws.com
CWS Coil Winding Specialist.
1510 E. Edinger Ave.
Unit B. Santa Ana, CA. 92705

TITLE: Inductor Common Mode 110uH 60A

SIZE B | DWG. NO. C-36A29-07 | REV B

SCALE 1=1 | SHEET 1 OF 1

EP FORM0005 REV 3 10/01

CAD-FILE: