The information contained in this drawing is the sole property of CWS Coil Winding Specialist.
Any reproduction in part or whole without written permission of CWS Coil Winding Specialist is prohibited.

REVISION HISTORY

REV	ECN	DESCRIPTION	SIGN & DATE BY	DATE	CHK	DATE
B		PRE-PRODUCTION RELEASE	TDK	9/15/04	JLAU	9/15/04

6 WHERE SHOWN, USING A PERMANENT MARKING METHOD MARK PART NUMBER AND REVISION IN APPROX

TO THE CORE
MUST REST FLAT ON PCB). LEADS MUST BE TANGENT
FLUSH WITH THE COIL EDGE, AS SHOWN (I.E. COIL
5 REMOVE INSULATION AND TIN LEADS APPROX. 0.50 INCH

CORE AND EVENLY SPACED
WIND 17 TURNS, # 19 AWG SINGLE LAYER ON EACH SIDE OF
4 CONSTRUCTION:

TO INSURE INTERGRITY OF WINDING SEPARATION
HI-POT TEST FOR INTERWINDING ISOLATION, 1250VDC
RATED CURRENT = 7 AMPS/COIL
DCR = 18 mOHMS MAX./COIL, MEASURED USING QUADTECH 2200
L = MEASURED AT 3 mH MIN/COIL <1 KHZ, 1Vrms>
3 SPECIFICATIONS:

APPROVED PART
OUTER WRAP: 3M #11 OR #69 OR OTHER CWS
WIRE: UL RECOGNIZED 155°C RATTING MAGNET WIRE
CWS BYTEMARK OR OTHER APPROVED PART
2 CORE: COATED FERRITE TOROID, HIGH PERM MNZN

SPACER RATING CLASS B (130°C) REQUIRED
1 MATERIAL: UL RECOGNIZED 94V-0 FOR FLAMMABILITY

NOTES: UNLESS OTHERWISE SPECIFIED.

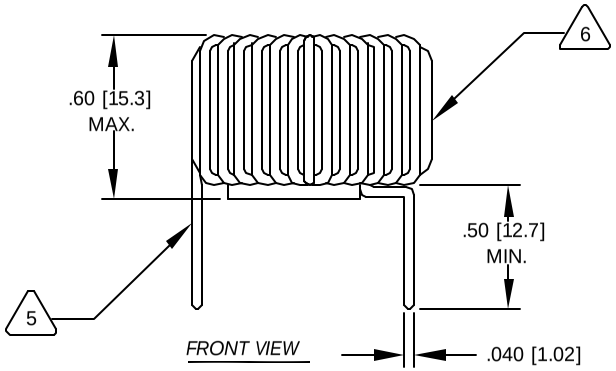

FRONT VIEW

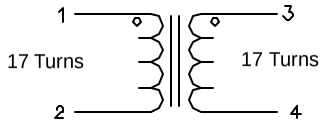

SCHEMATIC

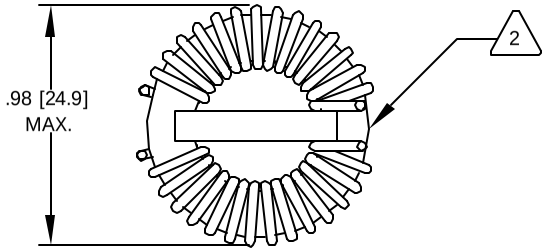

BOTTOM VIEW

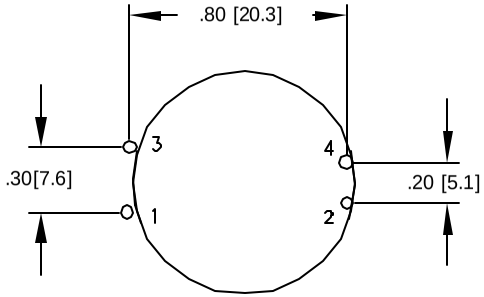

MOUNTING HOLES PATTERN

QTY	CODE IDENT	MFG. P/N	DESCRIPTION	ITEM NO.

PARTS LIST

AUTOCAD		X
SOLIDWORKS		
SIGN		DATE
DRAWN	TDK	9/15/04
CHECKED	JLAU	9/15/04
ENGR.	KSUN	9/15/04
APPR.	JLAU	9/15/04

UNLESS OTHERWISE SPECIFIED
DIMENSIONING AND TOLERANCE PER ANSI Y14.5M
ALL DIMENSIONS ARE IN INCHES AND [MILIMETERS].
TOLERANCE INCHES: .XXX=±.010 .XX=±.020 ∠=±0°30'
TOLERANCE METRICS: .XXX=±.254 .XX=±.51 ∠=±0°30'
ANGLE PROJECTION
DO NOT SCALE DRAWING

COILWS COM, INC
www.coilws.com
CWS Coil Winding Specialist.
1510 E. Edinger Ave.
Unit B. Santa Ana, CA. 92705

TITLE: Common Mode Choke 7 Amps

SIZE B | DWG. NO. C-B2133-00 | REV B

SCALE 2=1 | SHEET 1 OF 1

CAD-FILE: