REVISION HISTORY

REV	ECN	DESCRIPTION	SIGN & DATE BY	DATE	CHK	DATE
B		PRE-PRODUCTION RELEASE	TDK	9/15/04	JLAU	9/15/04

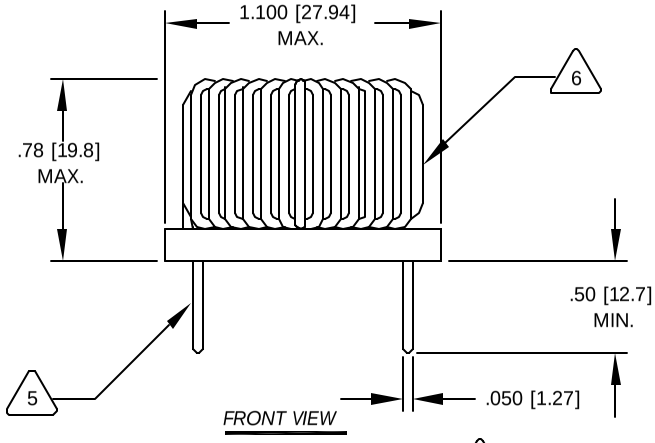

FRONT VIEW

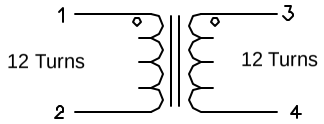

SCHEMATIC

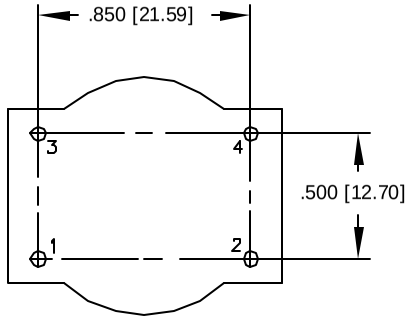

MOUNTING HOLES PATTERN

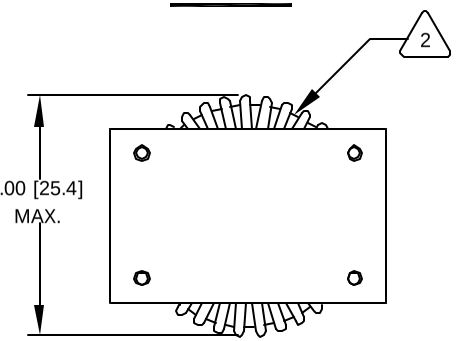

BOTTOM VIEW

6 WHERE SHOWN, USING A PERMANENT MARKING METHOD MARK PART NUMBER AND REVISION IN APPROX

TO THE CORE
MUST REST FLAT ON PCB). LEADS MUST BE TANGENT
FLUSH WITH THE COIL EDGE, AS SHOWN (I.E. COIL
5 REMOVE INSULATION AND TIN LEADS APPROX. 0.50 INCH

CORE AND EVENLY SPACED
WIND 12 TURNS, # 17 AWG SINGLE LAYER ON EACH SIDE OF
4 CONSTRUCTION:

TO INSURE INTERGRITY OF WINDING SEPARATION
HI-POT TEST FOR INTERWINDING ISOLATION, 1250VDC
CURRENT RATING : 12 AMPS
DCR = 6.5 mOHMS MAX./COIL, MEASURED USING QUADTECH 2200
L = MEASURED AT1.0 mH MIN/COIL <1 KHZ, 1Vrms>
3 SPECIFICATIONS:

APPROVED PART
OUTER WRAP: 3M #11 OR #69 OR OTHER CWS
WIRE: UL RECOGNIZED 155°C RATTING MAGNET WIRE
CWS BYTEMARK OR OTHER APPROVED PART
2 CORE: COATED FERRITE TOROID, HIGH PERM MNZN

SPACER & BOBBIN RATING CLASS B (130°C) REQUIRED
1 MATERIAL: UL RECOGNIZED 94V-0 FOR FLAMMABILITY

NOTES: UNLESS OTHERWISE SPECIFIED.

QTY	CODE IDENT	MFG. P/N	DESCRIPTION	ITEM NO.

PARTS LIST

UNLESS OTHERWISE SPECIFIED
DIMENSIONING AND TOLERANCE PER ANSI Y14.5M
ALL DIMENSIONS ARE IN INCHES AND [MILIMETERS].
TOLERANCE INCHES: .XXX=±.010 .XX=±.020 ∠=±0°30'
TOLERANCE METRICS: .XXX=±.254 .XX=±.51 ∠=±0°30'
ANGLE PROJECTION
DO NOT SCALE DRAWING

		SIGN	DATE
AUTOCAD		X	
SOLIDWORKS			
DRAWN	TDK		9/15/04
CHECKED	JLAU		9/15/04
ENGR.	KSUN		9/15/04
APPR.	JLAU		9/15/04

COILWS COM, INC
WWW.coilws.com

CWS Coil Winding Specialist.
1510 E. Edinger Ave.
Unit B, Santa Ana, CA. 92705

TITLE:
Common Mode Choke
12 Amps

SIZE B | DWG. NO. C-B2134-00 | REV B

SCALE 2=1 | SHEET 1 OF 1

EP FORM0005 REV 3 10/01

CAD-FILE: