REVISION HISTORY						
REV	ECN	DESCRIPTION	SIGN & DATE			
			BY	DATE	CHK	DATE
E		PRODUCTION RELEASE	TDK	6/07/07	JLAU	6/07/07

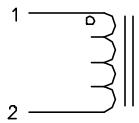

SCHEMATIC

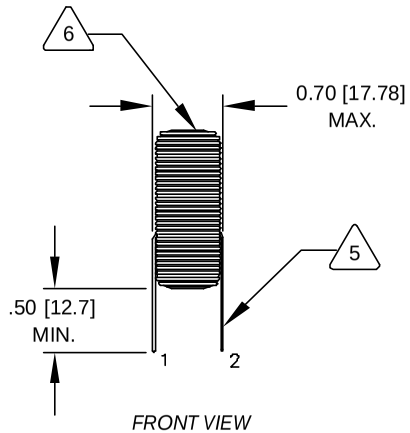

FRONT VIEW

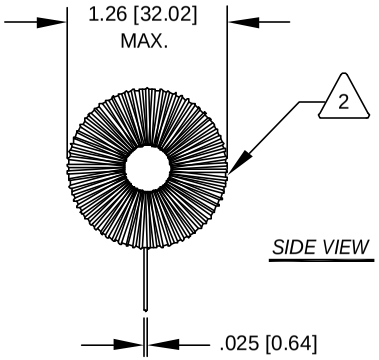

SIDE VIEW

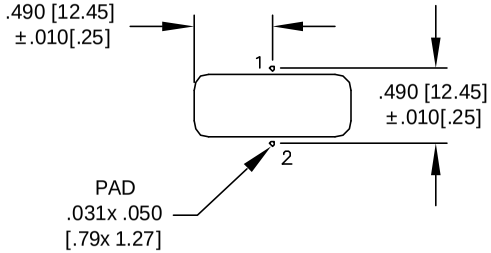

MOUNTING HOLES PATTERN

7 BUILT TO RoHS COMPLIANCE AND LEAD FREE

6 WHERE SHOWN, USING A PERMANENT MARKING METHOD
MARK PART NUMBER AND REVISION

LEAD MUST BE TANGENT TO THE CORE
COIL MUST REST FLAT ON PCB
FROM TIP OF WIRE
5 REMOVE INSULATION AND TIN LEADS

WIND CORE EVENLY SPACED
4 CONSTRUCTION:

CURRENT RATING AT 240 Vac = 1 Amps
CURRENT RATING AT 120 Vac = 2 Amps
HI-POT = 750 VDC , CORE TO WINDING
DCR= 0.8 OHM MAX
L= 4.5 mH ±20%, (1K Hz, 0.1 V)
3 SPECIFICATIONS @ 25°C

APPROVED PART
OUTER WRAP: 3M OR OTHER CWS
WIRE: UL RECOGNIZED 155°C RATED MAGNET WIRE
CWS BYTEMARK OR OTHER APPROVED PART
2 CORE: IRON POWDER

1 MATERIAL: UL RECOGNIZED 94V-0 FOR FLAMMABILITY

NOTES:POWER HANDLING AT 240 Vac = 250 WATTS

DESIGNED TO MEET UL 1283 AND EN 133200 APPROVALS
READ FROM BOTTOM UP

QTY	CODE IDENT	MFG. P/N	DESCRIPTION	ITEM NO.

PARTS LIST

AUTOCAD	X	
SOLIDWORKS		
SIGN		DATE
DRAWN	TDK	6/07/07
CHECKED	JLAU	6/07/07
ENGR.	KSUM	6/07/07
APPR.	JLAU	6/07/07

UNLESS OTHERWISE SPECIFIED
DIMENSIONING AND TOLERANCE PER ANSI Y14.5M
ALL DIMENSIONS ARE IN INCHES AND [MILIMETERS].
TOLERANCE INCHES: .XXX=±.010 .XX=±.020 ∢=±0°30'
TOLERANCE METRICS: .XXX=±.254 .XX=±.51 ∢=±0°30'
ANGLE PROJECTION
DO NOT SCALE DRAWING

COILWS COM, INC
www.coilws.com
CWS Coil Winding Specialist.
353 W. GROVE AVE.
ORANGE, CA. 92865

TITLE: Open Toroidal Chokes

SIZE B | DWG. NO. CWS-1121-250W | REV E

SCALE 1=1 | SHEET 1 OF 1

CAD-FILE: