The information contained in this drawing is the sole property of CWS Coil Winding Specialist.
Any reproduction in part or whole without written permission of CWS Coil Winding Specialist is prohibited.

REVISION HISTORY

REV	ECN	DESCRIPTION	SIGN & DATE BY	DATE	CHK	DATE
D		PRODUCTION RELEASE	RPR	9/09/04	JLAU	9/09/04

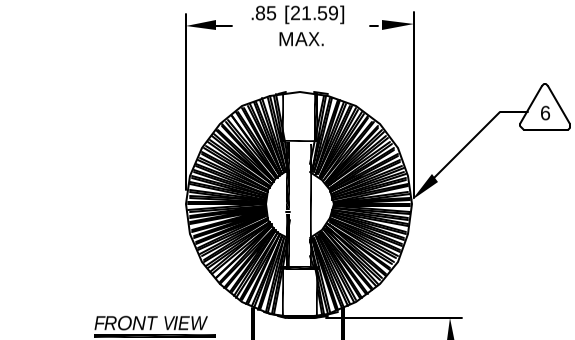

FRONT VIEW

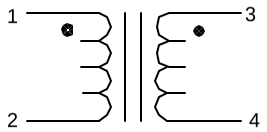

SCHEMATIC

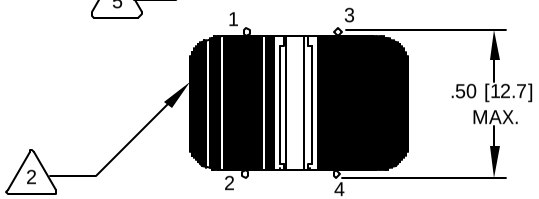

BOTTOM VIEW

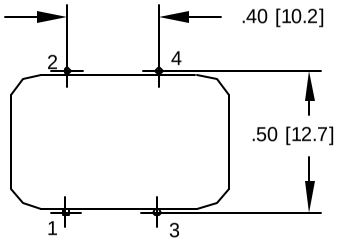

MOUTING HOLES PATTERN

6 WHERE SHOWN, USING A PERMANENT MARKING METHOD
IF APPLICABLE, MARK PART NUMBER AND REVISION

5 FLUSH WITH THE COIL EDGE, AS SHOWN
REMOVE INSULATION AND TIN LEADS

4 WIND ON EACH SIDE OF CORE AND EVENLY SPACED
CONSTRUCTION:

TEST FREQUENCY = 10 kHz
TEMP RANGE = -25 °C TO 120 °C
MAX TEMP RISE = 30.8 °C
TEST VOLTAGE = 2000 VAC, 1 MIN
RATED VOLTAGE = 250 VAC OR VDC
RATED CURRENT = 3.0 AMPS

3 TOTAL DCR OF BOTH WINDINGS = 0.0659 OHMS MAX COMBINED
L = 1.0 mH NOMINAL., 50 Hz - 400 kHz, 0.250 Vrms, 0 ADC
INSULATION RESISTANCE = 100 MEGA-OHMS MIN. @ 500 VDC
SPECIFICATIONS AT 25 °C

2 WIRE: UL RECOGNIZED 130°C RATED MAGNET WIRE
CWS BYTEMARK OR OTHER APPROVED PART
CORE: FERRITE TOROID.

1 BOBBIN RATING CLASS B (130°C) REQUIRED
MATERIAL: UL RECOGNIZED 94V-0 FOR FLAMMABILITY

NOTES: UNLESS OTHERWISE SPECIFIED, COMMON MODE CHOKE

QTY	CODE IDENT	MFG. P/N	DESCRIPTION	ITEM NO.

PARTS LIST

AUTOCAD	X	
SOLIDWORKS		
SIGN		DATE
DRAWN	RPR	9/09/04
CHECKED	JLAU	9/09/04
ENGR.	KSUN	9/09/04
APPR.	JLAU	9/09/04

UNLESS OTHERWISE SPECIFIED
DIMENSIONING AND TOLERANCE PER ANSI Y14.5M
ALL DIMENSIONS ARE IN INCHES AND [MILIMETERS].
TOLERANCE INCHES: .XXX=±.010 .XX=±.015 ∠=±0°30'
TOLERANCE METRICS: .XXX=±.254 .XX=±.38 ∠=±0°30'
ANGLE PROJECTION
DO NOT SCALE DRAWING

COILWS COM, INC
WWW.coilws.com
CWS Coil Winding Specialist.
1510 E. Edinger Ave.
Unit B, Santa Ana, CA. 92705

TITLE: Common Mode Chokes

SIZE B | DWG. NO. LFV-102U-3A | REV D

SCALE 2=1 | SHEET 1 OF 1

CAD-FILE: