REVISION HISTORY						
REV	ECN	DESCRIPTION	SIGN & DATE			
			BY	DATE	CHK	DATE
A		PRODUCTION RELEASE	RPR	6/08/04	JLAU	6/08/04

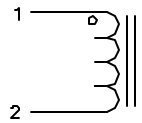

SCHEMATIC

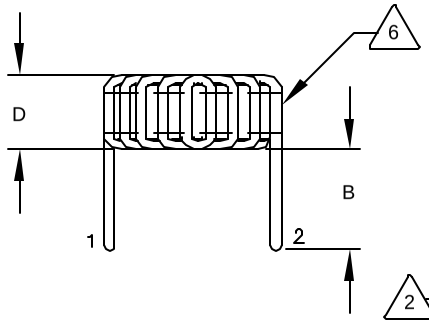

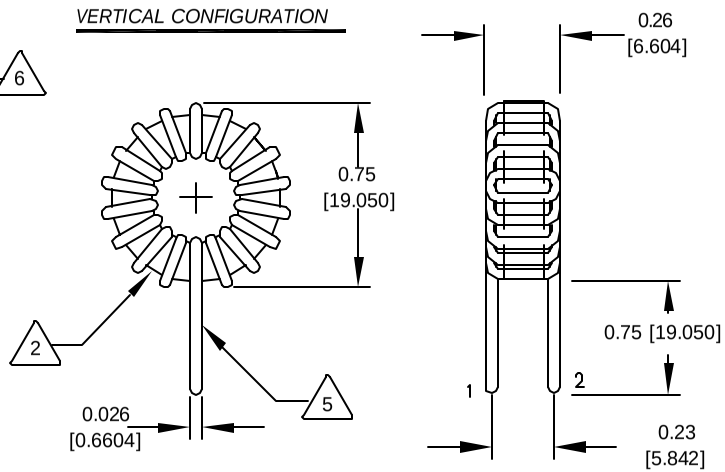

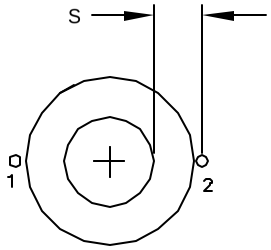

MOUNTING HOLES PATTERN

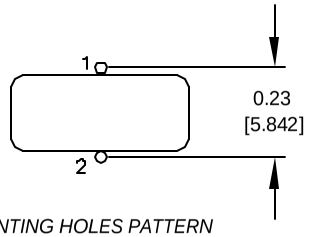

MOUNTING HOLES PATTERN

6 WHERE SHOWN, USING A PERMANENT MARKING METHOD IF APPLICABLE, MARK PART NUMBER AND REVISION

5 FLUSH WITH THE COIL EDGE, AS SHOWN
REMOVE INSULATION AND TIN LEADS APPROX. 0.5 INCH

4 WIND WIRE TO CORE EVENLY SPACED
CONSTRUCTION:

WEIGHT = 8.8 GRAMS
HI-POT TEST FOR WIRE TO CORE = 500 VDC
INDUCTANCE @ RATED CURRENT = 34.00 uH

DC CURRENT RATING = 3.0 AMPS MAX

DCR = 24.0 MILLI-OHMS, MAX
INDUCTANCE @ 0 AMPS = 43.0 uH, ± 20% , 1 KHz., 0.25 Vrms

3 SPECIFICATIONS @ 25 °C

2 WIRE: UL RECOGNIZED 130°C RATED MAGNET WIRE
CORE: COATED MICROMETAL IRON POWDER

CORE COATING RATING CLASS B (130°) REQUIRED
1 MATERIAL: UL RECOGNIZED 94V-0 FOR FLAMMABILITY

NOTES: UNLESS OTHERWISE SPECIFIED, TOROIDAL INDUCTOR

	CODE IDENT	MFG. P/N	DESCRIPTION	ITEM NO.

PARTS LIST

UNLESS OTHERWISE SPECIFIED
DIMENSIONING AND TOLERANCE PER ANSI Y14.5M
ALL DIMENSIONS ARE IN INCHES AND [MILIMETERS].
TOLERANCE INCHES: .XXX=±.005 .XX=±.015 ∠=±0°30'
TOLERANCE METRICS: .XXX=±.127 .XX=±.38 ∠=±0°30'
ANGLE PROJECTION
DO NOT SCALE DRAWING

AUTOCAD		X
SOLIDWORKS		
SIGN		DATE
DRAWN	RPR	6/08/04
CHECKED	JLAU	6/08/04
ENGR.	KSUN	6/08/04
APPR.	JLAU	6/08/04

COILWS COM, INC
WWW.coilws.com

CWS Coil Winding Specialist.
1510 E. Edinger Ave.
Unit B, Santa Ana, CA. 92705

TITLE: Power Toroidal Inductors Vertical & Horizontal

SIZE B | DWG. NO. TC-430M-3A-68.DWG | REV A

SCALE 2=1 | SHEET 1 OF 1

EP FORM0005 REV 3 10/01

CAD-FILE: