REVISION HISTORY						
REV	ECN	DESCRIPTION	SIGN & DATE			
			BY	DATE	CHK	DATE
A		PRODUCTION RELEASE	RPR	1/05/05	JLAU	1/05/05

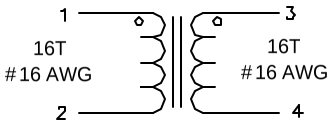

SCHEMATIC

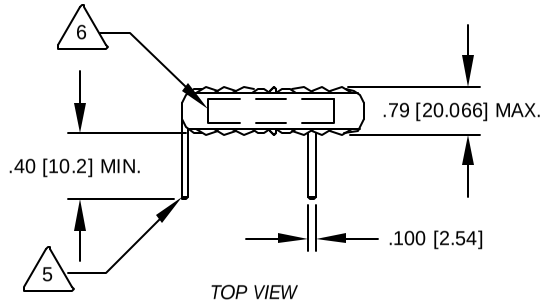

TOP VIEW

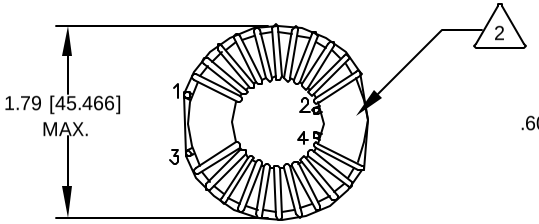

BOTTOM VIEW

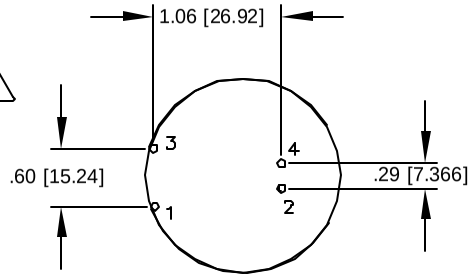

MOUNTING HOLES PATTERN

6 WHERE SHOWN, USING A PERMANENT MARKING METHOD
MARK PART NUMBER AND REVISION
WRAP INDUCTOR WITH TAPE, (PER NOTE 2)

TO THE CORE
MUST REST FLAT ON PCB). LEADS MUST BE TANGENT
FLUSH WITH THE COIL EDGE, AS SHOWN (I.E. COIL
5 REMOVE INSULATION AND TIN LEADS APPROX. 0.40 INCH

CORE, EVENLY SPACED AND NOTE POLARITY.
WIND 16 TURNS, AWG # 16. SINGLE LAYER ON EACH SIDE OF
4 CONSTRUCTION:

TO INSURE INTERGRITY OF WINDING SEPARATION
HI-POT TEST FOR INTERWINDING ISOLATION = 250VDC

EFFECTIVE FOR FILTERING NOISE IN 300 KHZ AND BELOW
DCR= 9 MILLI-OHMS MAX COMBINED (BOTH COILS)
L= 2.0 mH MIN / COIL; 2.6 mH NOM / COIL, 1 KHz, 1 Vrms
3 SPECIFICATIONS @ 25 °C :

WIRE: UL RECOGNIZED 200°C RATED MAGNET WIRE
CWS BYTEMARK OR OTHER APPROVED PART
2 CORE: COATED FERRITE TOROID, VERY HIGH PERM MNZN

1 MATERIAL: UL RECOGNIZED 94V-0 FOR FLAMMABILITY

NOTES: UNLESS OTHERWISE SPECIFIED. READ FROM BOTTOM UP.

QTY	CODE IDENT	MFG. P/N	DESCRIPTION	ITEM NO.

PARTS LIST

AUTOCAD		X
SOLIDWORKS		
SIGN		DATE
DRAWN	RPR	1/05/05
CHECKED	JLAU	1/05/05
ENGR.	KSUN	1/05/05
APPR.	JLAU	1/05/05

UNLESS OTHERWISE SPECIFIED
DIMENSIONING AND TOLERANCE PER ANSI Y14.5M
ALL DIMENSIONS ARE IN INCHES AND [MILIMETERS].
TOLERANCE INCHES: .XXX=±.010 .XX=±.020 ∠=±0°30'
TOLERANCE METRICS: .XXX=±.254 .XX=±.51 ∠=±0°30'
ANGLE PROJECTION
DO NOT SCALE DRAWING

COILWS COM, INC
WWW.coilws.com

CWS Coil Winding Specialist.
1510 E. Edinger Ave.
Unit B. Santa Ana, CA. 92705

TITLE:
Low Freq. Common Mode Inductor
2.6 mH (Nom), 10 Amps

SIZE B | DWG. NO. C-36A29-02 | REV A

SCALE 1=1 | SHEET 1 OF 1